can-am®

ATV PRODUCT SPEC BOOK

VEHICLE SPECIFICATIONS, ACCESSORIES, PARTS & MAINTENANCE AND APPAREL

2027

BRP

TABLE OF CONTENTS

ATV ACCESSORY COMPATIBILITY GUIDE 4

UNITS COMPARATIVE CHART 5

G2, G2L, G2S ACCESSORIES 16

G3, G3L ACCESSORIES 51

PARTS AND MAINTENANCE 94

CAN-AM APPAREL 110

IF WE SELL IT, WE STAND BY IT.

BRP LIMITED WARRANTY*

for new Parts, Accessories and Riding Gear

1-year limited warranty**

- Genuine BRP Parts and Accessories installed by you or your authorized BRP dealer
- Aftermarket Products sold through BRP
- Riding Gear

4-year limited warranty**

- Helmets

GET ALL THE DETAILS FROM YOUR CAN-AM OFF-ROAD DEALER

* Purchased at an authorized BRP dealership/distributor or on a BRP-authorized online store. Other exclusions may apply; see complete limited warranty or contact your Can-Am Off-Road authorized dealer. This limited warranty does not apply to factory-installed accessories and Evinrude parts and accessories.
** Manufacturer's limited warranty. Does not affect consumer guarantees.

Pricing is subject to change due to various taxes, tariffs or duties which may be applicable on certain products. BRP reserves the right to change the prices without incurring any obligations.

CANAMOFFROAD.COM

© 2026 Bombardier Recreational Products Inc. (BRP). All rights reserved. ®, TM and the BRP logo are trademarks of BRP or its affiliates. All other trademarks are the property of their respective owners. BRP reserves the right to discontinue or change specifications, prices, designs, features, models or equipment without incurring obligation. Some models shown may include optional equipment. Product performance may vary depending on external factors. BRP recommends that all SxS drivers take a training course. See your dealer. SxS can be hazardous to operate. Never exceed the SxS's passenger capacity. All SxS models are meant to be used by drivers aged 16 and older. Read the operator's guide. Follow all instructional and safety material and observe applicable laws and regulations. SxS are for off-road use only; never ride on paved surfaces or public roads. For your safety, the operator and passenger(s) must wear a helmet, eye protection and applicable protective clothing. Always remember that riding and alcohol/drugs don't mix. Never engage in stunt driving. Avoid excessive speed and be particularly careful on difficult terrain. Always ride responsibly and safely. See your authorised BRP dealer for details and visit https://can-am.brp.com/.

We’ve made things super simple.

- Check your model year
- Choose engine and model
- Learn your **PLATFORM CODE**

This **PLATFORM CODE** will let you know at a glance if the accessory is compatible with your vehicle.

G3L 6x6

G3 6x6

G3L

G3

G2L

G2S

ATV ACCESSORY COMPATIBILITY GUIDE

Model year	Model	Engine configuration	Platform code
2017 2018	Outlander	450, 570	G2L
	Outlander	650, 850, 1000	G2
	Outlander Max	450, 570	G2L MAX
	Outlander Max	650, 850, 1000	G2 MAX
	6x6	650, 1000	G2 MAX
	Renegade	570, 800, 1000	G2S
2019 2020 2021 2022	Outlander	450, 570	G2L
	Outlander	650, 850, 1000R	G2
	Outlander Max	450, 570	G2L MAX
	Outlander Max	650, 850, 1000R	G2 MAX
	6x6	450	G2L MAX
	6x6	650, 1000	G2 MAX
	Renegade	570, 650, 850, 1000R	G2S
2023	Outlander	450, 570	G2L
	Outlander	650, 850, 1000R	G2
	Outlander Max	450, 570	G2L MAX
	Outlander Max	650, 850, 1000R	G2 MAX
	6x6	450	G2L MAX
	6x6	650, 1000	G2 MAX
	Renegade	650, 1000R	G2S
	Outlander	500, 700	G3L
	Outlander PRO	HD5, HD7	G3L
	Outlander Max	500, 700	G3L MAX
2024	Outlander	500, 700	G3L
	Outlander	850, 1000R	G2
	Outlander PRO	HD5, HD7	G3L
	Outlander Max	500, 700	G3L MAX
	Outlander Max	850, 1000R	G2 MAX
	6x6	450	G2L MAX
	6x6	650, 1000	G2 MAX
	Renegade	650, 1000R	G2S
2025	Outlander	500, 700	G3L
	Outlander	850, 1000R	G3
	Outlander PRO	HD5, HD7	G3L
	Outlander MAX PRO	HD7	G3L MAX
	Outlander Max	500, 700	G3L MAX
	Outlander Max	850, 1000R	G3 MAX
	6x6	450	G2L MAX
	6x6	650, 1000	G2 MAX
	Renegade	650, 1000R	G2S
2026 2027	Outlander	500, 700	G3L
	Outlander (2026)	850, 1000R	G3
	Outlander (2027)	1000, 1000R	G3
	Outlander PRO	HD5, HD7	G3L
	Outlander MAX PRO	HD5, HD7	G3L
	Outlander MAX	500, 700	G3L MAX
	Outlander MAX (2026)	850, 1000R	G3 MAX
	Outlander MAX (2027)	1000, 1000R	G3 MAX
	Outlander Electric		G3L
	Outlander MAX Electric		G3L MAX
	Outlander MAX 6x6	700	G3L MAX
	Outlander MAX 6x6 (2026)	850, 1000R	G3 MAX
	Outlander MAX 6x6 (2027)	1000, 1000R	G3 MAX
	Renegade (2026)	650, 1000R	G2S

		OUTLANDER PRO HD5 T	**OUTLANDER PRO XU HD5 T / HD7 T**		**OUTLANDER PRO XU HD7 T ABS**	**OUTLANDER MAX PRO XU HD7 T**
COLOR OPTIONS		Sandstone	Sandstone		Sandstone	Sandstone
ENGINES		HD5	HD5	HD7	HD7	HD7
	Type	40 hp (29.8 kW) / 50.2 Nm, Rotax® ACE (Advanced Combustion Efficiency) 650 cc, single cylinder, liquid cooled, catalytic converter	40 hp (29.8 kW) / 50.2 Nm, Rotax® ACE (Advanced Combustion Efficiency) 650 cc, single cylinder, liquid cooled, catalytic converter	50 hp (36.8 kW) / 55.6 Nm, Rotax® ACE (Advanced Combustion Efficiency) 650 cc, single cylinder, liquid cooled, catalytic converter	50 hp (36.8 kW) / 55.6 Nm, Rotax® ACE (Advanced Combustion Efficiency) 650 cc, single cylinder, liquid cooled, catalytic converter	50 hp (36.8 kW) / 55.6 Nm, Rotax® ACE (Advanced Combustion Efficiency) 650 cc, single cylinder, liquid cooled, catalytic converter
	Fuel Delivery System	Intelligent Throttle Control (iTC™) with Electronic Fuel Injection (EFI)	Intelligent Throttle Control (iTC™) with Electronic Fuel Injection (EFI)		Intelligent Throttle Control (iTC™) with Electronic Fuel Injection (EFI)	Intelligent Throttle Control (iTC™) with Electronic Fuel Injection (EFI)
	Transmission	pDrive primary CVT with work calibration Extra low L / H / N / R / P	pDrive primary CVT with work calibration Extra low L / H / N / R / P		pDrive primary CVT with work calibration Extra low L / H / N / R / P	pDrive primary CVT with work calibration Extra low L / H / N / R / P
	Drive Train	Selectable 2WD / 4WD with Visco-Lok† auto-locking front differential	Selectable 2WD / 4WD / Lock 4WD with Visco-4Lok front differential		Selectable 2WD / 4WD / Lock 4WD with BTC (Brake traction Control)	Selectable 2WD / 4WD / Lock 4WD with Visco-4Lok front differential
	Driving Assistance	Speed limiter	Intelligent Engine Braking (iEB™)	Work / Standard / Sport modes Intelligent Engine Braking (iEB™) Speed limiter	Work / Standard / Sport modes Intelligent Engine Braking (iEB™) Speed limiter	Work / Standard / Sport modes Intelligent Engine Braking (iEB™) Speed limiter
	Power Steering		Tri-Mode Dynamic Power Steering (DPS)		Tri-Mode Dynamic Power Steering (DPS)	Tri-Mode Dynamic Power Steering (DPS)
SUSPENSIONS	**Front Suspension**	Double A-arm 9.75 in. (24.8 cm) travel	Double A-arm 9.75 in. (24.8 cm) travel		Double A-arm 9.75 in. (24.8 cm) travel	Double A-arm 9.75 in. (24.8 cm) travel
	Front Shocks	Twin Tube	Twin Tube		Twin Tube	Twin Tube
	Rear Suspension	Double A-arm 10.25 in. (26 cm) travel	Double A-arm 10.25 in. (26 cm) travel		Double A-arm 10.25 in. (26 cm) travel	Double A-arm 10.25 in. (26 cm) travel
	Rear Shocks	Twin Tube	Twin Tube		Twin Tube	Twin Tube
TIRES / WHEELS	**Front & Rear Tires**	6-ply rating 26 x 8/10 x 12 in.	XPS Trail King, 6-ply rating, 26 x 8/10 x 12 in.		XPS Trail King, 6-ply rating, 26 x 8/10 x 12 in.	XPS Trail King, 6-ply rating, 26 x 8/10 x 12 in.
	Wheels	12 in. Steel	12 in. cast aluminum		12 in. cast aluminum	12 in. cast aluminum
BRAKES	**Front**	Dual 214 mm disc brakes with hydraulic twin-piston calipers	Dual 214 mm disc brakes with hydraulic twin-piston calipers		Dual 214 mm disc brakes with hydraulic twin-piston calipers	Dual 214 mm disc brakes with hydraulic twin-piston calipers
	Rear	Single 214 mm disc brake with hydraulic twin-piston caliper	Single 214 mm disc brake with hydraulic twin-piston caliper		Single 214 mm disc brake with hydraulic twin-piston caliper	Single 214 mm disc brake with hydraulic twin-piston caliper
DIMENSIONS / CAPACITIES	**Estimated Dry Weight***	370.1kg	400.5 kg		400.5 kg	426.4 kg
	L x W x H	93 x 47.6 x 57 in. (236 x 120.9 x 144.8 cm)	93 x 48.2 x 57 in. (236 x 122.4 x 144.8 cm)		93 x 48.2 x 57 in. (236 x 122.4 x 144.8 cm)	101 x 48.8 x 57 in. (256.5 x 124 x 144.8 cm)
	Wheelbase	53 in. (134.5 cm)	53 in. (134.5 cm)		53 in. (134.5 cm)	60.4 in. (153.5 cm)
	Ground Clearance	13 in. (33 cm)	13 in. (33 cm)		13 in. (33 cm)	13 in. (33 cm)
	Seat Height	38.6 in. (98 cm)	38.6 in. (98 cm)		38.6 in. (98 cm)	38.6 in. (98 cm)
	Rack Capacity	Front: 54.4 kg / Rear: 109 kg	Front: 54.4 kg / Rear: 109 kg		Front: 54.4 kg / Rear: 109 kg	Front: 54.4 kg / Rear: 109 kg
	Storage Capacity	34 L	34 L		34 L	34 L
	Towing Capacity	830 kg trailer with brakes / 394 kg trailer without brakes	830 kg trailer with brakes / 394 kg trailer without brakes		830 kg trailer with brakes / 394 kg trailer without brakes	830 kg trailer with brakes / 394 kg trailer without brakes
	Bed Capacity	N/A	N/A		N/A	N/A
	Fuel Capacity	19.5 L	19.5 L		19.5 L	19.5 L
FEATURES	**Gauge**	4.5 in. digital display	4.5 in. digital display		4.5 in. digital display	4.5 in. digital display
	Magneto	420-W	500-W		500-W	500-W
	Instrumentation	N/A	Phone charger with 1xUSB-A and 1xUSB-C outputs		Phone charger with 1xUSB-A and 1xUSB-C outputs	Phone charger with 1xUSB-A and 1xUSB-C outputs
	Anti-theft System	RF Digitally Encoded Security System (D.E.S.S.™)	RF Digitally Encoded Security System (D.E.S.S.™)		RF Digitally Encoded Security System (D.E.S.S.™)	RF Digitally Encoded Security System (D.E.S.S.™)
	Lighting	LED headlights and tail lights LED signature	LED headlights and tail lights LED signature		LED headlights and tail lights LED signature	LED headlights and tail lights LED signature
	Winch		Can-Am HD3500 (1,588 kg) winch with synthetic cable		Can-Am HD3500 (1,588 kg) winch with synthetic cable	Can-Am HD3500 (1,588 kg) winch with synthetic cable
	Seat	Standard	Standard		Standard	Removable passenger seat
	Handlebar	Standard	Standard		Standard	Standard
	Protection	Heavy Duty front bumper Rear bumper HMWPE front and rear A-Arm protection (5 mm) Full skid plate	Heavy Duty front bumper Rear bumper HMWPE front and rear A-Arm protection (5 mm) Full skid plate		Heavy Duty front bumper Rear bumper HMWPE front and rear A-Arm protection (5 mm) Full skid plate	Heavy Duty front bumper Rear bumper HMWPE front and rear A-Arm protection (5 mm) Full skid plate
	Hitch Type	2 in. hitch with tow ball	2 in. hitch with tow ball		2 in. hitch with tow ball	2 in. Rear hitch and tow ball

† Visco-Lok is a trademark of GKN Viscodrive GmbH. All other trademarks are the property of their respective owners.
*Base model dry weight shown.
All above vehicles include a 2-year BRP limited warranty.

Not available in Finland & Norway

		OUTLANDER MAX PRO XU HD10 / HD11 T		OUTLANDER X MR	OUTLANDER XT 1000 T ABS
COLOR OPTIONS		Granite Grey	Dolomite Grey	Granite Grey	Fiery Red Metallic
ENGINES		HD10	HD11	700	1000
	Type	82 hp (60.3 kW)/ 89.5 Nm, Rotax 999 cc V-twin, DOHC, liquid cooled, catalytic converter, radiator cooling fan of 80W & 150 cc	101 hp (74.3 KW)/ 93.5 Nm, Rotax 999 cc V-twin, DOHC, liquid cooled,, catalytic converter, high flow radiator cooling fan of 120W & 500 cc	50 hp (36.8 kW) / 55.6 Nm, Rotax® ACE (Advanced Combustion Efficiency) 650 cc, single cylinder, liquid cooled with strategically positioned engine air intake	82 hp (60.3 kW)/ 89.5 Nm, Rotax 999 cc V-twin, DOHC, liquid cooled, catalytic converter, radiator cooling fan of 80W & 150 cc
	Fuel Delivery System	Intelligent Throttle Control (iTC™) with Electronic Fuel Injection (EFI)		Intelligent Throttle Control (iTC™) with Electronic Fuel Injection (EFI)	Intelligent Throttle Control (iTC™) with Electronic Fuel Injection (EFI)
	Transmission	pDrive primary CVT with work calibration Extra low L / H / N / R / P		pDrive primary CVT with strategically positioned air intake and exhaust Extra low L / H / N / R / P	pDrive primary CVT L / H / N / R / P
	Drive Train	Selectable 2WD / 4WD / Lock 4WD with Visco-4Lok front differential		Selectable 2WD / 4WD / Lock 4WD with Visco-4Lok front differential	Selectable 2WD / 4WD with BTC (Brake traction Control)
	Driving Assistance	Work / Standard / Sport modes Intelligent Engine Braking (iEB™) Speed limiter		Work / Standard / Sport modes Intelligent Engine Braking (iEB™)	Work / Standard / Sport modes Intelligent Engine Braking (iEB™)
	Power Steering	Tri-Mode Dynamic Power Steering (DPS)		Tri-Mode Dynamic Power Steering (DPS)	Tri-Mode Dynamic Power Steering (DPS)
SUSPENSIONS	Front Suspension	Arched Double A-arm 10.8 in. (27.4 cm) travel		Double A-arm 9 in. (22.9 cm) travel	Arched Double A-arm 10.8 in. (27.4 cm) travel
	Front Shocks	Twin tube		Twin Tube	Twin Tube
	Rear Suspension	Arched Double A-arm 12 in. (30.5 cm) travel		Double A-arm 9.75 in. (24.8 cm) travel	Arched Double A-arm 12 in. (30.5 cm) travel
	Rear Shocks	Twin tube		Twin Tube	Twin Tube
TIRES / WHEELS	Front & Rear Tires	XPS Trail King, 6-ply rating, 27 x 8/10 x 14 in.		XPS Swamp King 28 x 8/10 x 14 in.	XPS Trail King 2 - 26 x 8/10 x 14
	Wheels	14 in. cast aluminum		14 in. Aluminum	14 in. Aluminum
BRAKES	Front	Dual 214 mm disc brakes with hydraulic twin-piston calipers		Dual 214 mm disc brakes with hydraulic twin-piston calipers	Dual 214 mm disc brakes with hydraulic twin-piston calipers
	Rear	Single 214 mm disc brake with hydraulic twin-piston caliper		Single 214 mm disc brake with hydraulic twin-piston caliper	Single 214 mm disc brake with hydraulic twin-piston caliper
DIMENSIONS / CAPACITIES	Estimated Dry Weight*	453 kg		397.3 kg	442 kg
	L x W x H	102 x 49.2 x 57 in. (259 x 125 x 144.8 cm)		89.6 x 48.2 x 49 in. (227.6 x 122.4 x 124.5 cm)	90.2 x 49.2. x 47.9 in. (229.1 x 125 x 122 cm)
	Wheelbase	60.8 in. (154.4 cm)		53 in. (134.5 cm)	52.8 in. (134.2 cm)
	Ground Clearance	12.5 in (31.75 cm)		13 in. (33 cm)	12 in. (30.5 cm)
	Seat Height	38.3 in. (97.3 cm)		38.6 in. (98 cm)	37.8 in. (96 cm)
	Rack Capacity	Front: 54.4 kg / Rear: 109 kg		Front: NA / Rear: 109 kg	Front: 54.4 kg / Rear: 109 kg
	Storage Capacity	40 L		3.8 L	40 L
	Towing Capacity	830 kg trailer with brakes / 394 kg trailer without brakes		830 kg trailer with brakes / 394 kg trailer without brakes	830 kg trailer with brakes / 394 kg trailer without brakes
	Bed Capacity	N/A		N/A	N/A
	Fuel Capacity	19.5 L		19.5 L	19.5 L
FEATURES	Gauge	7.6 in. digital display		4.5 in. digital display	10.25 in. Touch display
	Magneto	650-W		500-W	650-W
	Instrumentation	Phone storage & USB-C charger		Phone charger with 1xUSB-A and 1xUSB-C outputs	Phone storage & USB-C charger
	Anti-theft System	RF Digitally Encoded Security System (D.E.S.S.™)		RF Digitally Encoded Security System (D.E.S.S.™) with tether	RF Digitally Encoded Security System (D.E.S.S.™)
	Lighting	LED headlights and tail lights LED signature		LED headlights and tail lights	LED headlights and tail lights LED signature
	Winch	Can-Am HD3500 (1,588 kg) winch with synthetic cable			Can-Am HD3500 (1,588 kg) winch with synthetic cable
	Seat	Removable passenger seat		Standard	Standard
	Handlebar	Standard		Standard	Standard
	Protection	Heavy Duty front and rear bumpers HMWPE front and rear A-Arm protection (5 mm) Full skid plate		Front bumper X mr footpegs Full skid plate	Full skid plate Heavy Duty front and rear bumpers Handguards
	Hitch Type	2 in. Rear hitch and tow ball		2 in. hitch receiver	2 in. hitch with tow ball

† Visco-Lok is a trademark of GKN Viscodrive GmbH. All other trademarks are the property of their respective owners.
*Base model dry weight shown.
All above vehicles include a 2-year BRP limited warranty.

		OUTLANDER DPS 500 T ABS	**OUTLANDER MAX DPS 500/700 T ABS**		**OUTLANDER MAX XT 700 T ABS**
COLOR OPTIONS		Granite Grey	Granite Grey		Dolomite Grey
ENGINES		500	500	700	700
	Type	40 hp (29.8 kW) / 50.2 Nm Rotax® ACE (Advanced Combustion Efficiency) 650 cc, single cylinder, liquid cooled, catalytic converter	40 hp (29.8 kW) / 50.2 Nm, Rotax® ACE (Advanced Combustion Efficiency) 650 cc, single cylinder, liquid cooled, catalytic converter	50 hp (36.8 kW) / 55.6 Nm, Rotax® ACE (Advanced Combustion Efficiency) 650 cc, single cylinder, liquid cooled, catalytic converter	50 hp (36.8 kW) / 55.6 Nm, Rotax® ACE (Advanced Combustion Efficiency) 650 cc, single cylinder, liquid cooled, catalytic converter
	Fuel Delivery System	Intelligent Throttle Control (iTC™) with Electronic Fuel Injection (EFI)	Intelligent Throttle Control (iTC™) with Electronic Fuel Injection (EFI)		Intelligent Throttle Control (iTC™) with Electronic Fuel Injection (EFI)
	Transmission	pDrive primary CVT L / H / N / R / P	pDrive primary CVT L / H / N / R / P		pDrive primary CVT L / H / N / R / P
	Drive Train	Selectable 2WD / 4WD with BTC (Brake traction Control)	Selectable 2WD / 4WD with BTC (Brake traction Control)		Selectable 2WD / 4WD with BTC (Brake traction Control)
	Driving Assistance	N/A	N/A	Work / Standard / Sport modes	Work / Standard / Sport modes Intelligent Engine Braking (iEB™)
	Power Steering	Tri-Mode Dynamic Power Steering (DPS)	Tri-Mode Dynamic Power Steering (DPS)		Tri-Mode Dynamic Power Steering (DPS)
SUSPENSIONS	**Front Suspension**	Double A-arm 9.75 in. (24.8 cm) travel	Double A-arm 9.75 in. (24.8 cm) travel		Double A-arm 9.75 in. (24.8 cm) travel
	Front Shocks	Twin Tube	Twin Tube		Twin Tube
	Rear Suspension	Double A-arm 10.25 in. (26 cm) travel	Double A-arm 10.25 in. (26 cm) travel		Double A-arm 10.25 in. (26 cm) travel
	Rear Shocks	Twin Tube	Twin Tube		Twin Tube
TIRES / WHEELS	**Front & Rear Tires**	25 x 8/10 x 12 in.	25 x 8/10 x 12 in.		Trail Force 26 x 8/10 x 14 in.
	Wheels	12 in. aluminum	12 in. aluminum		14 in. Aluminum
BRAKES	**Front**	Dual 214 mm disc brakes with hydraulic twin-piston calipers	Dual 214 mm disc brakes with hydraulic twin-piston calipers		Dual 214 mm disc brakes with hydraulic twin-piston calipers
	Rear	Single 214 mm disc brake with hydraulic twin-piston caliper	Single 214 mm disc brake with hydraulic twin-piston caliper		Single 214 mm disc brake with hydraulic twin-piston caliper
DIMENSIONS / CAPACITIES	**Estimated Dry Weight***	348.2 kg	364.1 kg		413.1 kg
	L x W x H	89.2 x 48.2 x 55.9 in. (226.6 x 122.4 x 142 cm)	97.2 x 48.2 x 55.9 in. (249.9 x 122.4 x 142 cm)		100.2 x 48.8 x 56.9 in. (254.5 x 124 x 144.5 cm)
	Wheelbase	53 in. (134.5 cm)	60.4 in. (153.5 cm)		60.4 in. (153.5 cm)
	Ground Clearance	12 in. (30.5 cm)	12 in. (30.5 cm)		12.5 in. (31.8 cm)
	Seat Height	38 in. (96.7 cm)	38.6 in. (98 cm)		38.6 in. (98 cm)
	Rack Capacity	Front: 54.4 kg / Rear: 109 kg	Front: 54.4 kg / Rear: 109 kg		Front: 54.4 kg / Rear: 109 kg
	Storage Capacity	34 L	34 L		34 L
	Towing Capacity	830 kg trailer with brakes / 394 kg trailer without brakes	830 kg trailer with brakes / 394 kg trailer without brakes		830 kg trailer with brakes / 394 kg trailer without brakes
	Bed Capacity	N/A	N/A		N/A
	Fuel Capacity	19.5 L	19.5 L		19.5 L
FEATURES	**Gauge**	4.5 in. digital display	4.5 in. digital display		4.5 in. digital display
	Magneto	500-W	500-W		500-W
	Instrumentation	N/A	N/A		Phone charger with 1xUSB-A and 1xUSB-C outputs
	Anti-theft System	RF Digitally Encoded Security System (D.E.S.S.™)	RF Digitally Encoded Security System (D.E.S.S.™)		RF Digitally Encoded Security System (D.E.S.S.™)
	Lighting	LED headlights and tail lights LED signature	LED headlights and tail lights LED signature		LED headlights and tail lights LED signature
	Winch				Can-Am HD3500 (1,588 kg) winch with synthetic cable
	Seat	Standard	Removable passenger seat		Removable passenger seat
	Handlebar	Standard	Standard		Standard
	Protection	Full skid plate	Full skid plate		Front and rear bumpers Full skid plate
	Hitch Type	2 in. hitch with tow ball	2 in. hitch with tow ball		2 in. hitch with tow ball

† Visco-Lok is a trademark of GKN Viscodrive GmbH. All other trademarks are the property of their respective owners.
*Base model dry weight shown.
All above vehicles include a 2-year BRP limited warranty.

				Not available in Finland & Norway
		OUTLANDER MAX XT 1000 T ABS	**OUTLANDER XT-P 1000R T ABS/ XT-P 1000R T ABS - WITH SAS**	**OUTLANDER X MR 1000R**
COLOR OPTIONS		Fiery Red Metallic	Dusty Navy	Loft Green Satin
ENGINES	**Type**	1000	1000R T ABS	1000R
		82 hp (60.3 kW)/ 89.5 Nm, Rotax 999 cc V-twin, DOHC, liquid cooled, catalytic converter, radiator cooling fan of 80W & 150 cc	101 hp (74.3 KW)/ 93.5 Nm, Rotax 999 cc V-twin, DOHC, liquid cooled, catalytic converter high flow radiator cooling fan of 120W & 500 cc	101 hp (74.3 KW)/ 93.5 Nm, Rotax 999 cc V-twin, DOHC, liquid cooled with strategically positioned engine air intake High flow radiator cooling fan of 120W & 500 cc
	Fuel Delivery System	Intelligent Throttle Control (iTC™) with Electronic Fuel Injection (EFI)	Intelligent Throttle Control (iTC™) with Electronic Fuel Injection (EFI)	Intelligent Throttle Control (iTC™) with Electronic Fuel Injection (EFI)
	Transmission	pDrive primary CVT L / H / N / R / P	pDrive primary CVT with specific calibration L / H / N / R / P	pDrive primary CVT with strategically positioned air intake and exhaust & specific calibration Extra low L / H / N / R / P
	Drive Train	Selectable 2WD / 4WD with BTC (Brake traction Control)	Selectable 2WD / 4WD / Lock 4WD with BTC (Brake traction Control)	Selectable 2WD / 4WD / Lock 4WD with Visco-4Lok front differential
	Driving Assistance	Work / Standard / Sport modes Intelligent Engine Braking (iEB™)	Work / Standard / Sport modes Intelligent Engine Braking (iEB™)	Work / Standard / Sport modes Intelligent Engine Braking (iEB™)
	Power Steering	Tri-Mode Dynamic Power Steering (DPS)	Tri-Mode Dynamic Power Steering (DPS)	Tri-Mode Dynamic Power Steering (DPS)
SUSPENSIONS	**Front Suspension**	Arched Double A-arm 10.8 in. (27.4 cm) travel	Arched Double A-arm with sway bar 10.8 in. (27.4 cm) travel	Arched Double A-arm 7.5 in. (19 cm) travel
	Front Shocks	Twin Tube	Piggyback FOX Podium QS3 Gas shocks / KYB shocks with Smart-Shox Technology	SHOWA Internal Floating Pistons (IFP) Shocks
	Rear Suspension	Arched Double A-arm 12 in. (30.5 cm) travel	Arched Double A-arm 12 in. (30.5 cm) travel	Arched Double A-arm 10.2 in. (25.9 cm) travel
	Rear Shocks	Twin Tube	Piggyback FOX Podium QS3 Gas shocks / KYB shocks with Smart-Shox Technology	SHOWA Internal Floating Pistons (IFP) Shocks
TIRES / WHEELS	**Front & Rear Tires**	XPS Trail King 2 - 26 x 8/10 x 14 in.	XPS Trail King 2 - 27 x 8/10 x 14 in.	XPS Swamp King XL 30 x 9/10 x 14 in.
	Wheels	14 in. Aluminum	14 in. Aluminum beadlock	14 in. Aluminum
BRAKES	**Front**	Dual 214 mm disc brakes with hydraulic twin-piston calipers	Dual 214 mm disc brakes with hydraulic twin-piston calipers	Dual 214 mm disc brakes with hydraulic twin-piston calipers
	Rear	Single 214 mm disc brake with hydraulic twin-piston caliper	Single 214 mm disc brake with hydraulic twin-piston caliper	Dual 214 mm disc brakes with hydraulic twin-piston calipers
DIMENSIONS / CAPACITIES	**Estimated Dry Weight***	453 kg	442 kg	474 kg
	L x W x H	101.9 x 49.2 x 55.9 in. (258.9 x 125 x 142 cm)	93.9 x 49.2 x 55.9 in. (238.5 x 125 x 142 cm)	95.6 x 49.7 x 54.2 in. (242.9 x 126.2 x 137.6 cm)
	Wheelbase	60.8 in. (154.4 cm)	52.8 in. (134.2 cm)	52.8 in. (134.2 cm)
	Ground Clearance	12 in. (30.5 cm)	12 in. (30.5 cm)	13.2 in. (33.5 cm)
	Seat Height	37.8 in. (96 cm)	37.8 in. (96 cm)	37.8 in. (96 cm)
	Rack Capacity	Front: 54.4 kg / Rear: 109 kg	Front: 54.4 kg / Rear: 109 kg	Front: NA / Rear: 109 kg
	Storage Capacity	40 L	40 L	3.8 L
	Towing Capacity	830 kg trailer with brakes / 394 kg trailer without brakes	830 kg trailer with brakes / 394 kg trailer without brakes	830 kg trailer with brakes / 394 kg trailer without brakes
	Bed Capacity	N/A	N/A	N/A
	Fuel Capacity	19.5 L	19.5 L	19.5 L
FEATURES	**Gauge**	10.25 in. Touch display	7.6 in. digital display / 10.25 in. Touch display	7.6 in. digital display
	Magneto	650-W	650-W	650-W
	Instrumentation	Phone storage & USB-C charger	Phone storage & USB-C charger	Phone storage & USB-C charger
	Anti-theft System	RF Digitally Encoded Security System (D.E.S.S.™)	RF Digitally Encoded Security System (D.E.S.S.™)	RF Digitally Encoded Security System (D.E.S.S.™) with tether
	Lighting	LED headlights and tail lights LED signature	LED headlights and tail lights LED signature	LED headlights and tail lights LED signature
	Winch	Can-Am HD3500 (1,588 kg) winch with synthetic cable	Can-Am HD3500 (1,588 kg) winch with synthetic cable	3,500 lb (1,588 kg) bumper mounted winch with synthetic cable
	Seat	Removable passenger seat	Special Edition seat (color, stiching and material)	Special Edition seat (color, stiching and material)
	Handlebar	Standard	Aluminum taper-profile handlebar with sport handguards	Aluminum tapered-profile handlebar with J-Hook, mud handgrip, mud strap and 1 in. riser
	Protection	Full skid plate Heavy Duty front and rear bumpers Handguards	Full skid plate Heavy Duty front and rear bumpers Handguards	Full skid plate MUD front bumper with winch mount Heavy Duty rear bumper Aluminum pegs (driver footrest)
	Hitch Type	2 in. hitch with tow ball	2 in. hitch with tow ball	2 in. hitch receiver

† Visco-Lok is a trademark of GKN Viscodrive GmbH. All other trademarks are the property of their respective owners.
*Base model dry weight shown.
All above vehicles include a 2-year BRP limited warranty.

		Not available in Finland & Norway		
		OUTLANDER MAX X MR 1000R	**OUTLANDER MAX DPS 1000R T ABS**	**OUTLANDER MAX XT-P 1000R T ABS/ 1000R T ABS - WITH SAS**
COLOR OPTIONS		Loft Green Satin	Granite Grey	Dusty Navy
ENGINES	**Type**	1000R	1000R	1000R
		101 hp (74.3 KW)/ 93.5 Nm, Rotax 999 cc V-twin, DOHC, liquid cooled with strategically positioned engine air intake High flow radiator cooling fan of 120W & 500 cc	101 hp (74.3 KW)/ 93.5 Nm, Rotax 999 cc V-twin, DOHC, liquid cooled, catalytic converter, high flow radiator cooling fan of 120W & 500 cc	101 hp (74.3 KW)/ 93.5 Nm, Rotax 999 cc V-twin, DOHC, liquid cooled, catalytic converter, high flow radiator cooling fan of 120W & 500 cc
	Fuel Delivery System	Intelligent Throttle Control (iTC™) with Electronic Fuel Injection (EFI)	Intelligent Throttle Control (iTC™) with Electronic Fuel Injection (EFI)	Intelligent Throttle Control (iTC™) with Electronic Fuel Injection (EFI)
	Transmission	pDrive primary CVT with strategically positioned air intake and exhaust & specific calibration Extra low L / H / N / R / P	pDrive primary CVT L / H / N / R / P	pDrive primary CVT with specific calibration L / H / N / R / P
	Drive Train	Selectable 2WD / 4WD / Lock 4WD with Visco-4Lok front differential	Selectable 2WD / 4WD with BTC (Brake traction Control)	Selectable 2WD / 4WD / Lock 4WD with BTC (Brake traction Control)
	Driving Assistance	Work / Standard / Sport modes Intelligent Engine Braking (iEB™)	Work / Standard / Sport modes Intelligent Engine Braking (iEB™)	Work / Standard / Sport modes Intelligent Engine Braking (iEB™)
	Power Steering	Tri-Mode Dynamic Power Steering (DPS)	Tri-Mode Dynamic Power Steering (DPS)	Tri-Mode Dynamic Power Steering (DPS)
SUSPENSIONS	**Front Suspension**	Arched Double A-arm 7.5 in. (19 cm) travel	Arched Double A-arm 10.8 in. (27.4 cm) travel	Arched Double A-arm with sway bar 10.8 in. (27.4 cm) travel
	Front Shocks	SHOWA Internal Floating Pistons (IFP) Shocks	Twin Tube	Piggyback FOX Podium QS3 Gas shocks / KYB shocks with Smart-Shox Technology
	Rear Suspension	Arched Double A-arm 10.2 in. (25.9 cm) travel	Arched Double A-arm 12 in. (30.5 cm) travel	Arched Double A-arm 12 in. (30.5 cm) travel
	Rear Shocks	SHOWA Internal Floating Pistons (IFP) Shocks	Twin Tube	Piggyback FOX Podium QS3 Gas shocks / KYB shocks with Smart-Shox Technology
TIRES / WHEELS	**Front & Rear Tires**	XPS Swamp King XL 30 x 9/10 x 14 in.	26 x 8/10 x 14 in.	XPS Trail King 2 - 27 x 8/10 x 14 in.
	Wheels	14 in. Aluminum	14 in. Aluminum	14 in. Aluminum beadlock
BRAKES	**Front**	Dual 214 mm disc brakes with hydraulic twin-piston calipers	Dual 214 mm disc brakes with hydraulic twin-piston calipers	Dual 214 mm disc brakes with hydraulic twin-piston calipers
	Rear	Dual 214 mm disc brakes with hydraulic twin-piston calipers	Single 214 mm disc brake with hydraulic twin-piston caliper	Single 214 mm disc brake with hydraulic twin-piston caliper
DIMENSIONS / CAPACITIES	**Estimated Dry Weight***	486 kg	439 kg	453 kg
	L x W x H	102.2 x 47.6 x 54 in. (259.5 x 120.9 x 137.1 cm)	99.1 x 49.2 x 55.9 in. (251.7 x 125 x 142 cm)	101.9 x 49.2 x 55.9 in. (258.9 x 125 x 142 cm)
	Wheelbase	60.8 in. (154.4 cm)	60.8 in. (154.4 cm)	60.8 in. (154.4 cm)
	Ground Clearance	13.5 in. (34.3 cm)	12 in. (30.5 cm)	12 in. (30.5 cm)
	Seat Height	37.8 in. (96 cm)	37.8 in. (96 cm)	37.8 in. (96 cm)
	Rack Capacity	Front: NA / Rear: 109 kg	Front: 54.4 kg / Rear: 109 kg	Front: 54.4 kg / Rear: 109 kg
	Storage Capacity	3.8 L	40 L	40 L
	Towing Capacity	830 kg trailer with brakes / 394 kg trailer without brakes	830 kg trailer with brakes / 394 kg trailer without brakes	830 kg trailer with brakes / 394 kg trailer without brakes
	Bed Capacity	N/A	N/A	N/A
	Fuel Capacity	19.5 L	19.5 L	19.5 L
FEATURES	**Gauge**	7.6 in. digital display	7.6 in. digital display	7.6 in. digital display / 10.25 in. Touch display
	Magneto	650-W	650-W	650-W
	Instrumentation	Phone storage & USB-C charger	Phone storage	Phone storage & USB-C charger
	Anti-theft System	RF Digitally Encoded Security System (D.E.S.S.™) with tether	RF Digitally Encoded Security System (D.E.S.S.™)	RF Digitally Encoded Security System (D.E.S.S.™)
	Lighting	LED headlights and tail lights LED signature	LED headlights and tail lights	LED headlights and tail lights LED signature
	Winch	3,500 lb (1,588 kg) bumper mounted winch with synthetic cable		Can-Am HD3500 (1,588 kg) winch with synthetic cable
	Seat	Special edition 1-up seat with storage box	Removable passenger seat	Special Edition seat (color, stiching and material) with removable passenger seat
	Handlebar	Aluminum tapered-profile handlebar with J-Hook, mud handgrip, mud strap and 1 in. riser	Standard	Aluminum taper-profile handlebar with sport handguards
	Protection	Full skid plate MUD front bumper with winch mount Heavy Duty rear bumper Aluminum pegs (driver footrest)	Full skid plate	Full skid plate Heavy Duty front and rear bumpers Handguards
	Hitch Type	2 in. hitch receiver	2 in. hitch with tow ball	2 in. hitch with tow ball

† Visco-Lok is a trademark of GKN Viscodrive GmbH. All other trademarks are the property of their respective owners.
*Base model dry weight shown.
All above vehicles include a 2-year BRP limited warranty.

		OUTLANDER MAX BACKCOUNTRY 1000R	**OUTLANDER MAX LIMITED 1000R T ABS -WITH SAS**	**OUTLANDER 6X6 DPS 700 T**	**OUTLANDER MAX 6X6 DPS 700 T**
COLOR OPTIONS		Multicam Dark Camo	Stealth Black	Granite Grey	Granite Grey
ENGINES		1000R T	1000R	700	700
	Type	101 hp (74.3 KW)/ 93.5 Nm, Rotax 999 cc V-twin, DOHC, liquid cooled, catalytic converter, high flow radiator cooling fan of 120W & 500 cc	101 hp (74.3 KW)/ 93.5 Nm, Rotax 999 cc V-twin, DOHC, liquid cooled, catalytic converter, high flow radiator cooling fan of 120W & 500 cc	50 hp (37.3 kW) / 55.6 Nm, Rotax® ACE (Advanced Combustion Efficiency) 650 cc, single cylinder, liquid cooled, catalytic converter	50 hp (37.3 kW) / 55.6 Nm, Rotax® ACE (Advanced Combustion Efficiency) 650 cc, single cylinder, liquid cooled, catalytic converter
	Fuel Delivery System	Intelligent Throttle Control (iTC™) with Electronic Fuel Injection (EFI)	Intelligent Throttle Control (iTC™) with Electronic Fuel Injection (EFI)	Intelligent Throttle Control (iTC™) with Electronic Fuel Injection (EFI)	Intelligent Throttle Control (iTC™) with Electronic Fuel Injection (EFI)
	Transmission	pDrive primary CVT with specific calibration Extra low L / H / N / R / P	pDrive primary CVT with specific calibration L / H / N / R / P	pDrive primary CVT with work calibration Extra low L / H / N / R / P	pDrive primary CVT with work calibration Extra low L / H / N / R / P
	Drive Train	Selectable 2WD / 4WD / Lock 4WD with Visco-4Lok front differential	Selectable 2WD / 4WD / Lock 4WD with BTC (Brake traction Control)	Selectable 4WD / 6WD with Visco-Lok QE front differential	Selectable 4WD / 6WD with Visco-Lok QE front differential
	Driving Assistance	Work / Standard / Sport modes Intelligent Engine Braking (iEB™)	Work / Standard / Sport modes Intelligent Engine Braking (iEB™)	Work / Standard / Sport modes Intelligent Engine Braking (iEB™) Speed limiter	Work / Standard / Sport modes Intelligent Engine Braking (iEB™) Speed limiter
	Power Steering	Tri-Mode Dynamic Power Steering (DPS)	Tri-Mode Dynamic Power Steering (DPS)	Tri-Mode Dynamic Power Steering (DPS)	Tri-Mode Dynamic Power Steering (DPS)
SUSPENSIONS	**Front Suspension**	Arched Double A-arm with sway bar 7.5 in. (19 cm) travel	Arched Double A-arm with sway bar 10.8 in. (27.4 cm) travel	Double A-arm 9.8 in. (24.8 cm) travel	Double A-arm 9.8 in. (24.8 cm) travel
	Front Shocks	SHOWA Internal Floating Pistons (IFP) Shocks	KYB shocks with Smart-Shox Technology	Oil shocks (REC calibration)	Oil shocks (REC calibration)
	Rear Suspension	Arched Double A-arm 10.2 in. (25.9 cm) travel	Arched Double A-arm 12 in. (30.5 cm) travel	Double A-arm 9.7 in. (24.7 cm) travel	Double A-arm 9.7 in. (24.7 cm) travel
	Rear Shocks	SHOWA Internal Floating Pistons (IFP) Shocks	KYB shocks with Smart-Shox Technology	Oil shocks (REC calibration)	Oil shocks (REC calibration)
TIRES / WHEELS	**Front & Rear Tires**	XPS Iron Force - 30 x 9 x 14 in.	XPS Trail King 2 - 27 x 8/10 x 14 in.	XPS Trail King - 26 x 8/10 x 12 in.	XPS Trail King - 26 x 8/10 x 12 in.
	Wheels	14 in. Aluminum beadlock	14 in. Aluminum	12 in. Steel	12 in. Steel
BRAKES	**Front**	OVERSIZED Dual 252 mm disc brakes with hydraulic twin-piston calipers	Dual 214 mm disc brakes with hydraulic twin-piston calipers	Dual 214 mm disc brakes with hydraulic twin-piston calipers	Dual 214 mm disc brakes with hydraulic twin-piston calipers
	Rear	Dual 214 mm disc brakes with hydraulic twin-piston calipers	Single 214 mm disc brake with hydraulic twin-piston caliper	Dual 214 mm disc brakes with hydraulic twin-piston calipers	Dual 214 mm disc brakes with hydraulic twin-piston calipers
DIMENSIONS / CAPACITIES	**Estimated Dry Weight***	490 kg	453 kg	514 kg	558 kg
	L x W x H	99 x 49.8 x 55.5 in (251.5 x 126.5 x 141 cm)	101.9 x 49.2 x 55.9 in. (258.9 x 125 x 142 cm)	116.3 x 48.5 x 56.5 in. (295.3 x 124 x 143.5 cm)	124.3 x 48.5 x 56.5 in. (315.7 x x 124 x 143.5 cm)
	Wheelbase	60.8 in. (154.4 cm)	60.8 in. (154.4 cm)	85.7 in. (217.6 cm)	93.3 in (237 cm)
	Ground Clearance	13 in. (33 cm)	12 in. (30.5 cm)	12 in. (30.5 cm)	12 in. (30.5 cm)
	Seat Height	37.8 in. (96 cm)	37.8 in. (96 cm)	36.8 in. (93.4 cm)	36.8 in. (93.4 cm)
	Rack Capacity	Front: 54.4 kg / Rear: 109 kg	Front: 54.4 kg / Rear: 109 kg	Front: 54.4 kg	Front: 54.4 kg
	Storage Capacity	40 L	40 L	Front cargo: 30 L Rear cargo: 220 L Total : 250 L	Front cargo: 30 L Rear cargo: 220 L Total : 250 L
	Towing Capacity	830 kg trailer with brakes / 394 kg trailer without brakes	830 kg trailer with brakes / 394 kg trailer without brakes	1,125 kg trailer with brakes / 500 kg trailer without brakes	1,125 kg trailer with brakes / 500 kg trailer without brakes
	Bed Capacity	N/A	N/A	454 kg	454 kg
	Fuel Capacity	19.5 L	19.5 L	19.5 L	19.5 L
FEATURES	**Gauge**	10.25 in. Touch display	10.25 in. Touch display	4.5 in. digital display	4.5 in. digital display
	Magneto	650-W	650-W	500-W	500-W
	Instrumentation	Phone storage & USB-C charger	Phone storage & USB-A charger	Glove box	Glove box
	Anti-theft System	RF Digitally Encoded Security System (D.E.S.S.™)	RF Digitally Encoded Security System (D.E.S.S.™)	RF Digitally Encoded Security System (D.E.S.S.™)	RF Digitally Encoded Security System (D.E.S.S.™)
	Lighting	LED headlights and tail lights LED signature	LED headlights and tail lights LED signature	LED headlights and tail lights LED signature	LED headlights and tail lights LED signature
	Winch	Can-Am HD3500 (1,588 kg) winch with synthetic cable	Can-Am HD3500 (1,588 kg) winch with synthetic cable		
	Seat	Removable passenger seat	Special Edition seat (color, stiching and material) with removable passenger seat	Standard	Removable passenger seat
	Handlebar	Aluminum with riser and handguards	Standard	Standard	Standard
	Protection	Heavy Duty front and rear bumpers Full skid plate and footwell Front and rear A-Arm protection (5 mm) Handguards	Full skid plate Heavy Duty front and rear bumpers Handguards	Full skid plate	Full skid plate
	Hitch Type	2 in. hitch receiver	2 in. hitch with tow ball	2 in. Rear hitch and tow ball	2 in. Rear hitch and tow ball

† Visco-Lok is a trademark of GKN Viscodrive GmbH. All other trademarks are the property of their respective owners.
*Base model dry weight shown.
All above vehicles include a 2-year BRP limited warranty.

		OUTLANDER 6X6 DPS 1000 T	**OUTLANDER MAX 6X6 DPS 1000 T**	**OUTLANDER 6X6 BACKCOUNTRY 1000R T**	**OUTLANDER MAX 6X6 BACKCOUNTRY 1000R T**
COLOR OPTIONS		Granite Grey	Granite Grey	Stealth Black	Stealth Black
ENGINES		1000	1000	1000R	1000R
	Type	82 hp (60.3 kW) / 89.5 Nm, Rotax® 999 cc V-twin, DOHC, liquid cooled, catalytic converter, high flow radiator cooling fan of 120W & 500 cc	82 hp (60.3 kW) / 89.5 Nm, Rotax® 999 cc V-twin, DOHC, liquid cooled, catalytic converter, high flow radiator cooling fan of 120W & 500 cc	101 hp (74.3 KW) / 93.5 Nm, Rotax® 999 cc V-twin, DOHC, liquid cooled, catalytic converter, high flow radiator cooling fan of 120W & 500 cc	101 hp (74.3 KW) / 93.5 Nm, Rotax® 999 cc V-twin, DOHC, liquid cooled, catalytic converter, high flow radiator cooling fan of 120W & 500 cc
	Fuel Delivery System	Intelligent Throttle Control (iTC™) with Electronic Fuel Injection (EFI)	Intelligent Throttle Control (iTC™) with Electronic Fuel Injection (EFI)	Intelligent Throttle Control (iTC™) with Electronic Fuel Injection (EFI)	Intelligent Throttle Control (iTC™) with Electronic Fuel Injection (EFI)
	Transmission	pDrive primary CVT with work calibration Extra low L / H / N / R / P	pDrive primary CVT with work calibration Extra low L / H / N / R / P	pDrive primary CVT with work calibration Extra low L / H / N / R / P	pDrive primary CVT with work calibration Extra low L / H / N / R / P
	Drive Train	Selectable 4WD / 6WD with Visco-Lok QE front differential	Selectable 4WD / 6WD with Visco-Lok QE front differential	Selectable 4WD / 6WD / Lock 6WD with Visco-6Lok front differential	Selectable 4WD / 6WD / Lock 6WD with Visco-6Lok front differential
	Driving Assistance	Work / Standard / Sport modes Intelligent Engine Braking (iEB™) Speed limiter	Work / Standard / Sport modes Intelligent Engine Braking (iEB™) Speed limiter	Work / Standard / Sport modes Intelligent Engine Braking (iEB™) Speed limiter	Work / Standard / Sport modes Intelligent Engine Braking (iEB™) Speed limiter
	Power Steering	Tri-Mode Dynamic Power Steering (DPS)	Tri-Mode Dynamic Power Steering (DPS)	Tri-Mode Dynamic Power Steering (DPS)	Tri-Mode Dynamic Power Steering (DPS)
SUSPENSIONS	**Front Suspension**	Arched Double A-arm 10 in. (25.2 cm) travel	Arched Double A-arm 10 in. (25.2 cm) travel	Arched Double A-arm with sway bar 7.5 in. (19.5 cm) travel	Arched Double A-arm with sway bar 7.5 in. (19.5 cm) travel
	Front Shocks	Oil shocks (REC calibration)	Oil shocks (REC calibration)	SHOWA Internal Floating Pistons (IFP) Shocks	SHOWA Internal Floating Pistons (IFP) Shocks
	Rear Suspension	Arched Double A-arm 9.8 in. (24.8 cm) travel	Arched Double A-arm 9.8 in. (24.8 cm) travel	Arched Double A-arm with sway bar on middle axle 9 in. (22.9 cm) travel	Arched Double A-arm with sway bar on middle axle 9 in. (22.9 cm) travel
	Rear Shocks	Oil shocks (REC calibration)	Oil shocks (REC calibration)	SHOWA Internal Floating Pistons (IFP) Shocks	SHOWA Internal Floating Pistons (IFP) Shocks
TIRES / WHEELS	**Front & Rear Tires**	XPS Trail King - 28 x 8/10 x 14 in.	XPS Trail King - 28 x 8/10 x 14 in.	XPS Iron Force - 30 x 9 x 14 in.	XPS Iron Force - 30 x 9 x 14 in.
	Wheels	14 in. Aluminum	14 in. Aluminum	14 in. Aluminum beadlock	14 in. Aluminum beadlock
BRAKES	**Front**	Oversized Dual 252 mm disc brakes with hydraulic twin-piston calipers	Oversized Dual 252 mm disc brakes with hydraulic twin-piston calipers	Oversized Dual 252 mm disc brakes with hydraulic twin-piston calipers	Oversized Dual 252 mm disc brakes with hydraulic twin-piston calipers
	Rear	Dual 214 mm disc brakes with hydraulic twin-piston calipers	Dual 214 mm disc brakes with hydraulic twin-piston calipers	Dual 214 mm disc brakes with hydraulic twin-piston calipers	Dual 214 mm disc brakes with hydraulic twin-piston calipers
DIMENSIONS / CAPACITIES	**Estimated Dry Weight***	581 kg	631 kg	623 kg	659 kg
	L x W x H	116.3 x 49.3 x 56.5 in. (295.3 x 125.2 x 143.5 cm)	124.3 X 49.3 X 56.5 in. (315.7 x 125.2 x 143.5 cm)	119.1 x 49.7 x 59 in. (302.5 x 126.1 x 149.9 cm)	127.2 X 49.7 X 59 in. (323 x 126.1 x 149.9 cm)
	Wheelbase	85.7 in. (217.6 cm)	93.3 in (237 cm)	85.7 in. (217.6 cm)	93.3 in (237 cm)
	Ground Clearance	12 in. (30.5 cm)	12 in. (30.5 cm)	13 in. (33 cm)	13 in. (33 cm)
	Seat Height	36.8 in. (93.4 cm)	36.8 in. (93.4 cm)	37.8 in. (96 cm)	37.8 in. (96 cm)
	Rack Capacity	Front: 54.4 kg	Front: 54.4 kg	Front: 54.4 kg	Front: 54.4 kg
	Storage Capacity	Front cargo: 30 L Rear cargo: 220 L Rear undercargo: 25 L Total : 275 L	Front cargo: 30 L Rear cargo: 220 L Rear undercargo: 25 L Total : 275 L	Front cargo: 30 L Rear cargo: 220 L Rear undercargo: 25 L Total : 275 L	Front cargo: 30 L Rear cargo: 220 L Rear undercargo: 25 L Total : 275 L
	Towing Capacity	1,125 kg trailer with brakes / 750 kg trailer without brakes	1,125 kg trailer with brakes / 750 kg trailer without brakes	1,125 kg trailer with brakes / 750 kg trailer without brakes	1,125 kg trailer with brakes / 750 kg trailer without brakes
	Bed Capacity	454 kg	454 kg	454 kg	454 kg
	Fuel Capacity	19.5 L	19.5 L	19.5 L	19.5 L
FEATURES	**Gauge**	7.6 in. digital display	7.6 in. digital display	7.6 in. digital display	7.6 in. digital display
	Magneto	650-W	650-W	650-W	650-W
	Instrumentation	Phone storage	Phone storage	Phone storage & USB-C charger	Phone storage & USB-C charger
	Anti-theft System	RF Digitally Encoded Security System (D.E.S.S.™)	RF Digitally Encoded Security System (D.E.S.S.™)	RF Digitally Encoded Security System (D.E.S.S.™)	RF Digitally Encoded Security System (D.E.S.S.™)
	Lighting	LED headlights and tail lights LED signature	LED headlights and tail lights LED signature	LED headlights and tail lights LED signature	LED headlights and tail lights LED signature
	Winch			Can-Am HD3500 (1,588 kg) winch with synthetic cable	Can-Am HD3500 (1,588 kg) winch with synthetic cable
	Seat	Standard	Removable passenger seat	Special Edition	Special edition seat with removable passenger seat
	Handlebar	Standard	Standard	Aluminum with riser and handguards	Aluminum with riser and handguards
	Protection	Full skid plate	Full skid plate	Heavy Duty front bumper Full skid plate Footwell protectors Front & rear a-arms protectors Handguards	Heavy Duty front bumper Full skid plate Footwell protectors Front & rear a-arms protectors Handguards
	Hitch Type	2 in. Rear hitch and tow ball	2 in. Rear hitch and tow ball	2 in. Rear hitch and tow ball	2 in. Rear hitch and tow ball

† Visco-Lok is a trademark of GKN Viscodrive GmbH. All other trademarks are the property of their respective owners.
*Base model dry weight shown.
**Smart-Shox was developed in conjunction with Tractive Industries, a market leader in the suspension industry.
All above vehicles include a 2-year BRP limited warranty.

		OUTLANDER ELETRIC T	OUTLANDER MAX ELETRIC T
COLOR OPTIONS		White	White
MOTORS	Type	Electric	Electric
		47 hp (35kW) / 72 Nm, ROTAX® E-POWER, Liquid-cooled	47 hp (35kW) / 72 Nm, ROTAX® E-POWER, Liquid-cooled
	Power	Peak: 47 hp (35 kW) Continuous: 27 hp (20 kW)	Peak: 47 hp (35 kW) Continuous: 27 hp (20 kW)
	Torque Motor	Peak: 72 Nm Continuous: 28 Nm	Peak: 72 Nm Continuous: 28 Nm
	Top Speed	High gear: 37 mph (60 km/h) Low gear: 28 mph (45 km/h)	High gear: 37 mph (60 km/h) Low gear: 28 mph (45 km/h)
BATTERY	Battery Type	Integrated, Lithium-ion	Integrated, Lithium-ion
	Battery Operating Temperature Range	From -20°C to 40°C (-4 Fahrenheit to 104 Fahrenheit)	From -20°C to 40°C (-4 Fahrenheit to 104 Fahrenheit)
	Battery Capacity	8.9 kWh	8.9 kWh
	Cooling System	Liquid-cooled : Battery, inverter and on-board charger (charging cable not included, sold as accessory) Integrated AC heater for charging at low temperature	Liquid-cooled : Battery, inverter and on-board charger (charging cable not included, sold as accessory) Integrated AC heater for charging at low temperature
	Estimated Range (when fully charged)	Tested in accordance with WMTC*: 50 miles (80 km) Average utility range*: 31 miles (50 km)	Tested in accordance with WMTC*: 50 miles (80 km) Average utility range*: 31 miles (50 km)
	Regenerative braking	Regen braking with 3 levels adjustments	Regen braking with 3 levels adjustments
	Charger	On-board charger 6.6 kW Level 2 (compatible with level 1 charging) - charging cable not included, sold as accessory	On-board charger 6.6 kW Level 2 (compatible with level 1 charging) - charging cable not included, sold as accessory
	Connector Type	Type 2 IEC 62196 with integrated LED light	Type 2 IEC 62196 with integrated LED light
	Charging Time Level 2 (240 V)	50 min (20 - 80 %) 1 hour 30 min (0 - 100%)	50 min (20 - 80 %) 1 hour 30 min (0 - 100%)
	Charging Time Level 1 (120 V)	3 hours 10 min (20 - 80%) 5 hours 15 min (0 - 100%)	3 hours 10 min (20 - 80%) 5 hours 15 min (0 - 100%)
DRIVETRAIN	Transmission	L / N / H / P Reverse activated via start button	L / N / H / P Reverse activated via start button
	Drive Train	Selectable 2WD / 4WD with Visco-Lok† QE auto-locking front differential	Selectable 2WD / 4WD with Visco-Lok† QE auto-locking front differential
	Driving Assistance	Work / Standard / Sport modes Speed limiter	Work / Standard / Sport modes Speed limiter
	Power Steering	Tri-Mode Dynamic Power Steering (DPS)	Tri-Mode Dynamic Power Steering (DPS)
SUSPENSIONS	Front Suspension	Double A-arm 9.75 in. (24.8 cm) travel	Double A-arm 9.75 in. (24.8 cm) travel
	Front Shocks	Twin tube	Twin tube
	Rear Suspension	Double A-arm 10.25 in. (26 cm) travel	Double A-arm 10.25 in. (26 cm) travel
	Rear Shocks	Twin tube	Twin tube
TIRES / WHEELS	Front & Rear Tires	XPS Recon Force 26 x 8/10 x 14 in.	XPS Recon Force 26 x 8/10 x 14 in.
	Wheels	14 in. cast aluminum	14 in. cast aluminum
BRAKES	Front	Dual 214 mm disc brakes with hydraulic twin-piston calipers	Dual 214 mm disc brakes with hydraulic twin-piston calipers
	Rear	Single 214 mm disc brake with hydraulic twin-piston caliper	Single 214 mm disc brake with hydraulic twin-piston caliper
DIMENSIONS / CAPACITIES	Estimated Dry Weight*	402 kg	420 kg
	L x W x H	89.9 x 48.1 x 49.6 in. (228.3 x 122.2 x 126 cm)	98 x 48.1 x 56 in. (249 x 122.2 x 142.2 cm)
	Wheelbase	53 in. (134.5 cm)	60.7 in. (154.2 cm)
	Ground Clearance	12 in. (30.5 cm)	12 in. (30.5 cm)
	Seat Height	38 in. (96.7 cm)	38.6 in. (98 cm)
	Rack Capacity	Front: 54.4 kg / Rear: 109 kg	Front: 54.4 kg / Rear: 109 kg
	Storage Capacity	34 L	34 L
	Towing Capacity	830 kg trailer with brakes / 394 kg trailer without brakes	830 kg trailer with brakes / 394 kg trailer without brakes
	Bed Capacity		
FEATURES	Gauge	5 in. colored display	5 in. colored display
	Magneto	Continuous 500W (at all speed including at idle)	Continuous 500W (at all speed including at idle)
	Instrumentation	Phone charger with 1xUSB-A and 1xUSB-C outputs	Phone charger with 1xUSB-A and 1xUSB-C outputs
	Anti-theft System	RF Digitally Encoded Security System (D.E.S.S.™)	RF Digitally Encoded Security System (D.E.S.S.™)
	Lighting	LED headlights and tail lights LED signature LED POD light	LED headlights and tail lights LED signature LED POD light
	Winch		
	Seat	Standard	Removable passenger seat
	Handlebar	Standard	Standard
	Protection	Front and rear bumpers Full skid plate	Front and rear bumpers Full skid plate
	Hitch Type	2 in. hitch receiver with towball	2 in. hitch receiver with towball

† Visco-Lok is a trademark of GKN Viscodrive GmbH. All other trademarks are the property of their respective owners.
*Base model dry weight shown.
Battery: 5 years (12,427 miles / 20,000 km limit), Vehicle: 2-year BRP Limited warranty

		YOUTH RENEGADE X XC
COLOR OPTIONS		Orange Crush
ENGINES	Type	110 EFI
		112 cc 4-stroke single cylinder, air cooled
	Fuel Delivery System	Electronic Fuel Injection (EFI) with built-in throttle limiter
	Transmission	CVT F / N / R
	Drive Train	Chain driven / 2WD Electric starting system
	Driving Assistance	N/A
	Power Steering	N/A
SUSPENSIONS	Front Suspension	Double A-arm / 5.5 in. (14 cm) travel
	Front Shocks	Gas with piggyback reservoirs
	Rear Suspension	Swingarm / 6 in. (15.2 cm) travel
	Rear Shocks	Gas
TIRES / WHEELS	Front & Rear Tires	Front: 19 x 7 x 8 in. Rear: 18 x 9.5 x 8 in.
	Wheels	8 in. steel
BRAKES	Front	Dual drum brakes
	Rear	Single drum brake
DIMENSIONS / CAPACITIES	Estimated Dry Weight*	140 kg
	L x W x H	60.6 x 42 x 38.6 in. (154 x 108 x 98 cm)
	Wheelbase	41 in. (105 cm)
	Ground Clearance	8.3 in. (21.1 cm) under frame / 4.5 in. (11.4 cm) under rear axle
	Seat Height	28 in. (71 cm)
	Rack Capacity	N/A
	Storage Capacity	N/A
	Towing Capacity	N/A
	Bed Capacity	N/A
	Fuel Capacity	1.6 gal (6 L)
FEATURES	Gauge	Neutral, reverse, fuel level & check engine lights
	Magneto	N/A
	Instrumentation	N/A
	Ignition	Mechanical key
	Lighting	Halogen running headlights
	Winch	N/A
	Seat	Standard
	Handlebar	Sport handguards Ergonomy & controls sized for 10 years old and up
	Protection	Front bumper
	Hitch Type	N/A

This vehicle includes a 2-year BRP limited warranty.

G2, G2L, G2S ACCESSORIES

G2, G2L, G2S ACCESSORIES

LinQ Accessories	17
Racks & Holders	21
Cargo & Storage	22
Windshields	23
Handlebars & Mirrors	25
Seats	25
HMWPE Skid Plates	26
Aluminum Skid Plates	27
HMWPE & Aluminum Skid Plates	29
Plastic Skid Paltes	30
Bumpers & Guards	31
Lights & Electrical	33
Winches	36
Hitches	38
Recovery	39
Performance	40
Covers, Decals & Add-Ons	41
Apache Track Systems	43
ProMount Plows	46

G2, G2L AND G2S LINQ ACCESSORIES

ACCESSORY MOUNTING LOCATIONS AND REQUIREMENTS

No tools needed: Quickly install and remove accessories by hand. Sturdy mounting system that holds up to the roughest terrain.	OUTLANDER 450/570	OUTLANDER	RENEGADE
LinQ ACCESSORIES WITH 16" BASE	• LinQ® anchors mounted 16 inches apart, center-to-center. • Lower loading capacity than the LinQ with 36" base accessories. • Can be used on Can-Am ATV and SxS vehicles, Can-Am Spyder and Ryker vehicles, Sea-Doo watercraft and Ski-Doo snowmobiles.		
LinQ Rigid Cooler (18 L) 715010491	LinQ Adapter Plate **715007273** & LinQ Base Installation Kit **715008125**	LinQ Anchor Adapter Kit **715004960** & LinQ Base Installation Kit **715008125**	LinQ Luggage Rack **715001734** & LinQ Anchor Adapter Kit **715004960** OR LinQ Adapter Plate **715007274** & LinQ Base Installation Kit **715008125**
LinQ Tool Box 715008111			
LinQ SR 5.5 Gal (21 L) Bag 860202449			
NEW **LinQ Expandable Bag 4.5 US Gal (17 L)** 860202895			
LinQ Modular Box 715005494 • (10 L) 715007112 • (20 L) 715006830 • (30 L)			
LinQ Tool Kit 715006829			
LinQ 10.6 Gal (40 L) Roll-Top Bag 715008110			
LinQ ACCESSORIES WITH 36" BASE	• Mount on LinQ racks often used by Can-Am ORV vehicles. • Higher loading capacity than the LinQ with 16" base accessories. • Usage is limited to Can-Am ORV vehicles.		
LinQ 12 Gal (45 L) Cargo Box 715003879	LinQ Base **715002350**	No further requirements	LinQ Luggage Rack **715001734**
LinQ 23 Gal (86 L) Trunk Box 715004923			
LinQ 32 Gal (121 L) Trunk Box 715001747 (1-up) / 715001748 (1-up EU) 715001749 (MAX) / 715001750 (MAX EU)	No compatibility		
LinQ 11.5 Gal (43 L) Audio Cargo Box 715003018	LinQ Base **715002350**		
LinQ 8 Gal (30 L) Cooler Box 715004778 • Black	No compatibility		
LinQ Premium Storage Bag by OGIO 715002923 • Black	LinQ Base **715002350**		
LinQ Heavy Duty Basket 715001215			
LinQ Low Profile Basket 715004282			
LinQ HOLDERS			
LinQ 4" (10 cm) Rack Extension 715001711 • Silver / 715001665 • Black	Not compatible **Alternative 5" Rack Extensions (**715001913**) are available for G2L*	No further requirements	LinQ Luggage Rack **715001734**
LinQ 6" (15 cm) Rack Extension 715001712 • Silver / 715001671 • Black			
LinQ Mounted Gear Grips 715005340	LinQ Base **715002350**		
LinQ Tool Holder 715007358			
LinQ Gun Boot Rack 715002112 715002113	Not compatible **Alternative Gun Boot Rack (**715001919**) is available for G2L*		No compatibility

LinQ ACCESSORIES WITH 16" BASE

LinQ Rigid Cooler (18 L)

G2, G2L, G2S | **715010491**

- Versatile LinQ 16" configuration fits many vehicles.
- Durable rotomolded rigid construction.
- Molded-in handles for quick installation and removal.
- High quality insulation for optimal ice retention.
- Sealed lid for airtight, weather-tight closure.
- Ergonomic and secure latch system offers excellent sealing.
- 4.7 US gal (18 L) capacity.

LinQ Modular Box

G2, G2L, G2S

715005494 • (10 L)
715007112 • (20 L)
715006830 • (30 L)

- Allows stacking of other modular boxes to always have the right gear accessible.
- Always have the right box size to fit everything.
- Can be installed on any LinQ Base with a 16" width.
- See table for installation location and requirements.

Thermal Insert for LinQ Modular Box (10 L)

G2, G2L, G2S | **219401110**

- Insulated liner.
- Fits very well in the LinQ Modular Box (10 L).
- Can contain seven 355 ml cans.
- Keeps ice cold for one day.
- Interior dimensions: 9" L x 17" W x 2½" H.

LinQ Tool Kit

G2, G2L, G2S | **715006829**

- Includes:
  - Cutter pliers
  - Long-nose pliers
  - Locking pliers
  - Ratchet wrench ⅜" drive
  - 6" ratchet extension
  - Integrated CVT belt storage location (belt not included)
  - Long-socket 19 mm ⅜" drive - 6 pts
  - Socket 18 mm ⅜" drive
  - Long-socket 17 mm ⅜" drive - 6 pts
  - Socket 15 mm ⅜" drive
  - Socket 13 mm ⅜" drive
  - Socket 10 mm ⅜" drive
  - Socket 8 mm ⅜" drive
  - Socket Torx T40 ⅜" drive
  - Socket Torx T30 ⅜" drive
  - Socket Torx T20 ⅜" drive
  - Breaker bar ⅜" drive
- Combination wrench set:
  - Wrench 19 mm
  - Wrench 18 mm
  - Wrench 15 mm
  - Wrench 13 mm
  - Wrench 10 mm
  - Wrench 8 mm
- See table for installation location and requirements.

LinQ Tool Box

G2, G2L, G2S | **715008111**

- High precision injected HDPE construction provides rigidity and durability.
- 5 gal (19 L) maximum capacity.
- Weather-resistant, sealed and lockable cover.
- Easy one-second on/off tool-less system. All the benefits of LinQ – simple, fast and secure.
- See table for installation location and requirements.

LinQ 10.6 Gal (40 L) Roll-Top Bag

G2, G2L, G2S | **715008110**

- Fully waterproof roll-top dry bag will securely store and confine your equipment.
- LinQ mounted using heavy-duty rigid plastic base.
- High capacity storage solution 10.6 gal (40 L).
- Bottom foam liner for additional equipment protection.
- Integrated handle for easy transportation on/off the vehicle.
- Marinized for salt water purposes.
- Dimensions: 14" L x 19" W x adjustable H.
- See table for installation location and requirements.

SR 5.5 Gal (21 L) LinQ Bag

G2, G2L, G2S | **860202449**

- Semi-rigid expandable bag.
- 5.5 gal (21 L) capacity.
- See table for installation location and requirements.

NEW LinQ Expandable Bag 4.5 US Gal (17 L)	G2, G2L, G2S	**860202895**

- Semi-rigid expandable 8.5 L to 17 L (2.2 to 4.5 US gallon) LinQ bag.
- Compression style bag allows secure storage of belongings.
- Premium look pairs well with the vehicle.
- Quick, easy and secure LinQ system installation.
- Attaches with one set of LinQ fasteners.
- Featuring inside mesh pocket to separate smaller items.

LinQ ACCESSORIES WITH 36" BASE

LinQ 12 Gal (45 L) Cargo Box	G2 (front only for 6x6 & MAX models 2013–2014), G2L, G2S	**715003879**

- LinQ mounted for easy on, easy off installation.
- Holds cargo safely and securely while riding.
- See table for installation location and requirements.

LinQ 23 Gal (86 L) Trunk Box	G2 (except 6x6 models), G2L, G2S	**715004923**

- LinQ mounted for easy on, easy off installation.
- Lockable and weather-resistant.
- Holds cargo safely and securely while riding.
- Comfort pads for passenger.
- See table for installation location and requirements.

LinQ 32 Gal (121 L) Trunk Box	G2 (except MAX models & 6x6), G2S	**715001747**
	European Version	**715001748** • No rear taillight.

- LinQ Retrofit Adapter Plate (715001334) is required for G1 models.
- Trunk Box Panels available in many colors to match your vehicle (sold separately).
- See table for installation location and requirements.

LinQ 32 Gal (121 L) Trunk Box for Outlander MAX	G2 (MAX models only except 6x6 models)	**715001749**
	European Version	**715001750** • No rear taillight.

- Passenger comfort is ensured on active rides as well as longer recreational rides thanks to the ergonomically designed passenger padding, which is comfort-fitted with a portion made of closed cell foam that won't absorb water.
- Very easy to embark even when driver is seated.
- Trunk Box Panels available in many colors to match your vehicle (sold separately).

LinQ 32 Gal (121 L) Trunk Box Panels	G2 (except 6x6 models), G2S	■ **715001391** • Black
	European Version	■ **715001397** • Black

- Color panels to match the LinQ 32 Gal (121 L) Trunk Box to your vehicle.

LinQ 11.5 Gal (43 L) Audio Cargo Box	G2 (front only for 6x6 & MAX models 2013–2014), G2L, G2S	**715003018**

- Mounts on/off easily to hold/carry cargo safely and securely.
- The Bluetooth enabled receiver and 6.5" (16.5 cm) speakers are smartly concealed and integrated in the cover.
- Automatic shut-off function protects your battery by turning the system off after 10 minutes of inactivity.
- Backlit control panel perfect for night riding.
- Water-resistant speakers.
- Delivers the best sound quality on the market to sweeten your ride courtesy of a built-in full range high-efficiency amplifier.
- See table for installation location and requirements.

LinQ 8 Gal (30 L) Cooler Box

G2 (except 6x6 models), G2S

■ **715004778** • Black
■ **715004698** • Gray

- LinQ mounted for easy on, easy off installation.
- Rotomolded construction provides exceptional rigidity and durability.
- Premium-quality foam insulation for optimal ice retention.
- Integrated, fully-removable compartment protects food.
- Robust rubber latches keep the cover tightly closed.
- Weather-resistant.
- Convenient drain plug.
- See table for installation location and requirements.

LinQ Premium Storage Bag by OGIO

G2 (except 6x6 models), G2L, G2S

■ **715002923** • Black

- LinQ mounted for easy on, easy off installation.
- Holds cargo safely and securely while riding.
- See table for installation location and requirements.

LinQ Low Profile Basket

G2, G2L (front only for MAX & 6x6 models), G2S

715004282

- Low profile, open basket increases cargo space.
- Perfect for easy access to tools, rope, winch and plow accessories.
- Multiple bungee cord and tie-down anchor points.
- Made of impact-resistant injected polypropylene.
- See table for installation location and requirements.

LinQ Heavy-Duty Basket

G2, G2L (front only for MAX & 6x6 models), G2S

715001215

- Made of high-strength, low-alloy steel.
- LinQ mount for easy on, easy off installation.
- Can be placed on both front and back racks of vehicle.
- See table for installation location and requirements.

Large Cargo Box *

G2 , G2L (except 6x6)

715007001

- Rear bed to carry large items.
- Anchor points (D-ring), LinQ fixtures for tool holder, and marks to allow the installation of a 16" accessory.
- Also has a mat for the floor and slot to enable the installation of a divider and a slot for a divider to close the recess on the rear vertical lip.
- It is installed on ATV platforms through the LinQ system and hooks to make it easy to install and remove.

LinQ HOLDERS

LinQ Tool Holder

G2, G2L, G2S

715007358

- Ultra-versatile tool holder.
- Convenient swivel-latch allows tools to be stored in any orientation.
- Sold in pairs.

Required for installation:
- G2S models: LinQ Luggage Rack (715001734).

LinQ Gear Grips

G2, G2L, G2S

715005340

- Durable and flexible grips provide a custom fit for a variety of items from 1" to 4" (2.5 cm to 10 cm) in diameter.
- Heavy-duty design for carrying bows, fishing poles, rakes, farm tools and more.
- Quick-release button opens grip quickly for easy access to gear.
- Heavy-duty base system built for the toughest adventures.
- Make transporting your tools a snap by combining the Gear Grips with the LinQ system.
- 360° orientation.
- Sold in pairs.

* *Installation of some accessories shown may impact vehicle compliance with some regulations. Consult your local dealer for information.*

LinQ MOUNTING

LinQ Anchor Adapter Kit

G2, G2S | **715004960**

- Allows the installation of accessories with 16" LinQ Base on LinQ racks.
- Tool-less installation and removal.

Required for installation:
- G2S models: LinQ Luggage Rack (715001734).

LinQ Base

G2L | **715002350**

- Made of glass fiber reinforced polypropylene.
- Allows you to install LinQ accessories.
- Sold in pack of 4.

LinQ Lock

G2, G2L, G2S | **860201968**

- Simple way to securely lock most LinQ accessories.
- Lock cover protects lock from the elements.
- Corrosion resistant.
- Pack of 1, includes 2 keys.

Not compatible with:
- LinQ 4.2 US Gal (16 L) Cooler, LinQ Tool Box, LinQ Tool Holder, LinQ Gear Grips, LinQ Gun Case (715010936) or LinQ Cargo Bed Rack (715009336).

LinQ Replacement Parts

715010798

- Unique mounting fastener usable on any LinQ system accessory.
- Tool-less installation and removal.
- Sold in pairs.

RACKS & HOLDERS

LinQ Rack Extension – 4" (10 cm)

G2, G2S | **715001711** · Silver, **715001665** · Black

- Fits front or rear.
- Strong and durable.
- Helps keep cargo securely in place.
- Easy and tool-less installation thanks to the LinQ system.
- Anti-corrosion coating with durable powder coat finish.

Required for installation:
- G2S models: LinQ Luggage Rack (715001734).

LinQ Rack Extension – 6" (15 cm)

G2, G2S | **715001712** · Silver, **715001671** · Black

- Fits front or rear.
- Strong and durable.
- Helps keep cargo securely in place.
- Easy and tool-less installation thanks to the LinQ system.
- Anti-corrosion coating with durable powder coat finish.

Required for installation:
- G2S models: LinQ Luggage Rack (715001734).

Rack Extension – 5" (13 cm)

G2L | **715001913**

- Fits front or rear.
- Made of carbon steel.
- Provides tie-down points to secure cargo on racks.
- Easy installation on tubular rack.
- Anti-corrosion coating with durable powder coat finish.

LinQ Luggage Rack

G2S (except X mr models) | **715001734**

- Bolt-on rack.
- Enables use of LinQ mounted accessories on the G2S.

LinQ Base Plate

G2L | **715007273**

- Enables use of 16" wide LinQ Base accessories on G2L to extend cargo options and journey opportunities.

Required for installation:
- LinQ Base Kit (715008125).

LinQ Base Plate

G2S | **715007274**

- Enables use of 16" wide LinQ Base accessories on G2S to extend cargo options and journey opportunities.

Required for installation:
- LinQ Base Kit (715008125).

Gun Boot Rack

G2L (MAX models only) | **715001919**

- Made of steel.
- Designed for the tubular rack.
- For use with Gun Boot 6.0 Impact by Kolpin.
- Can be mounted to either side of the vehicle.

Gun Boot 6.0 Impact† by Kolpin†

G2, G2L | **715001419**

- Extra room for pistol-grip-type weapons and small bipods.
- Easily fits firearms up to 51" (130 cm) in total length.
- Provides ample room for 2⅜" (60 mm) scopes.
- Hatchback design allows easy access.
- Ergonomically designed handle and molded attachment points for sling.
- Snap-close cover with locking capability.
- Designed to accommodate left and right hand bolt-action rifles and shotguns.
- Includes removable, shock absorbing foam and nylon impact liner for superior interior protection.
- Requires appropriate mounting kit for installation.

LinQ Gun Boot Rack
(Not illustrated)

G2 (except MAX, 6x6 & X mr 1000) | **715002112**
G2 (MAX & X mr 1000 models only) | **715002113**

- This lightweight Gun Boot Rack can be mounted on either side of your Outlander using the tool-less LinQ system.
- For use with Gun Boot 6.0 Impact by Kolpin.

Multi-Fit Holder

G2, G2L | **715002354** • Single; **715001945** • Double

- Open U-shaped bracket for carrying tools (shovel, axe) and hunting weapons (rifle, bow) that are safely secured, but easily accessible.
- Easy installation on tubular rack, extension racks, basket or bumpers.
- Sold in pairs.

Required for installation:
- G2 models: LinQ Rack Extension (715001711).

Gear Grips

G2L | **715001421**

- Durable, flexible grips cushion and protect while providing a custom fit for a variety of items from 1" to 4" (2.5 cm to 10 cm) in diameter.
- Heavy-duty design for carrying bows, fishing poles, rakes, farm tools and more.
- Quick-release button opens grip quickly for easy access to gear.
- Heavy-duty base system built for the toughest adventures.
- Easy installation on tubular racks, extension racks, brackets or bumpers.
- Sold in pairs.

CARGO & STORAGE

Side Walls & Tailgate

G2 (6x6 models only) | **715005153**

- Allows for a quick and easy conversion of the cargo bed into a trunk with plenty of room.
- Rotationally molded walls provide extreme durability for hard work - in all conditions.

Cargo Protection Wall
(Not illustrated)

G2 (6x6 models only) | **708301522**

- Fits with or without side walls

Hard Top

G2 (6x6 models only) | **715002394**

- The hard top provides a 116 gal (440 L) cargo box.
- Locking secures your belongings.
- The cover raises assisted by gas cylinders.

Cargo Box Pool

G2L (6x6 models only) | **715005256**

- Transforms the flatbed into a large capacity cargo box for increased loading possibilities.
- Made of durable formed HDPE and shaped to maximize cargo space.
- Allows access to vehicle's water-resistant rear compartment.
- Designed for perfect fit and easy installation.

Tarpaulin

G2 (6x6 models only) | **715002416**

- Fitted to cover all of the items in your cargo box completely.
- Prevents splash from entering cargo box.
- Easily removable for quick access.

18 Gal (70 L) Utility Box

G2 (6x6 models only) | **715001999**

- Wherever you go and whatever you do, this handy 18 gal (70 L) utility box is your mobile storage.
- The lid keeps your equipment safe from the elements in all conditions.
- Slides under the flatbed with handles for easy access.

Cargo Box Net

G2 (6x6 models only) | **715001371**

- Solid net designed to hook to the bottom of the cargo box for secure and compact confinement of your cargo.

Soft Storage Bag

G2, G2L, G2S | **715003759**

- 3 -section bag.
- Transport gear in a weatherproof bag.
- 11.8 gal (45 L) capacity soft cargo bag designed with vehicle's rack in mind to maximize potential storage.

Required for installation:
- G2S models: LinQ Luggage Rack (715001734).

Storage 2.6 Gal (10 L) Bag

269502121

- Roll-top dry bag for fully protecting your cargo from the elements.
- Fits in rear compartment of your vehicle.

WINDSHIELDS

Deluxe Fairing

G2 (except X mr & 6x6), G2L

■ **715001232** • Black
■ **715007073** • Tundra Green

- Innovative, richly featured wind protection.
- Quick tool-less removal once base brackets are mounted on handlebar.
- Two cup holders.
- Ready for GPS mounting kit.
- Optional mirrors and auxiliary lighting.
- Tapered Handlebar Adapter Kit is required for vehicles with 1⅛" (28 mm) tapered aluminum handlebars.
- Does not fit T3 models

Required for installation:
- Low, High or Extra High windshield.

Tapered Handlebar Adapter Kit
(Not illustrated)

Deluxe Fairing | **715002470**

- Required to install Deluxe Fairing on an Outlander X-TP and on any vehicle equipped with 1⅛" (28 mm) tapered aluminum handlebars.

Extra High Windshield *

Deluxe Fairing | **715000936**

- 16" (41 cm) windshield provides the ultimate protection against the elements while touring.
- For wind protection and winter applications.
- Tool-less installation and replacement.

High Windshield *

Deluxe Fairing | **715001211**

- 11" (28 cm) high, for wind protection and winter applications.
- Tool-less installation and replacement.

Low Windshield *

Deluxe Fairing | **715001227**

- 6" (15 cm) windshield allows you to keep your vehicle looking sporty while giving you some protection from the elements and the possibility of enjoying directional lighting.
- Tool-less installation and replacement.

ACCESSORIES

Auxiliary Windshield Lighting

Deluxe Fairing | **715003115**

- 2 premium LED spots for Deluxe Fairing for both increased output and directional lighting.
- 1,800 lumens.
- 2 x 10 W LED Cree light kit.
- Long-range illumination up to 350' (107 m), drawing less than 1 amp per light.

Deluxe Mirror Kit

Deluxe Fairing | **715002353**

- Improved mounting system.
- Wide rear view.
- Perfect fit with your Deluxe Fairing.

WINDSHIELD KITS

Extra High Windshield Kit *

G2, G2L, G2S (except X mr models) | **715003023**

- Made of polycarbonate with integrated vent to reduce air turbulence and rumble noise at high speeds for a quieter and smoother ride.
- Quick tool-less removal once base brackets are mounted on handlebar.
- Fits straight and tapered handlebars.
- Improved design for enhanced rigidity.
- 16" (41 cm) windshield.
- For ultimate wind protection and winter applications

Required for installation:
- XT and Mossy Oak models: Steering Cover (709400939).

High Windshield Kit *

G2, G2L, G2S (except X mr models) | **715006382**

- Made of polycarbonate with integrated vent to reduce air turbulence and rumble noise at high speeds for a quieter and smoother ride.
- Quick tool-less removal once base brackets are mounted on handlebar.
- Fits straight and tapered handlebars.
- Improved design for enhanced rigidity.
- 11" (28 cm) windshield.
- For wind protection and winter applications.

Required for installation:
- XT and Mossy Oak models: Steering Cover (709400939).

Low Windshield Kit *

G2, G2L, G2S (except X mr models) | **715003021**

- Made of polycarbonate with integrated vent to reduce air turbulence and rumble noise at high speeds for a quieter and smoother ride.
- Quick tool-less removal once base brackets are mounted on handlebar.
- Fits straight and tapered handlebars.
- Improved design for enhanced rigidity.
- 6" (15 cm) windshield.
- Allows you to keep your vehicle looking sporty while giving you some protection from the elements.

Required for installation:
- XT and Mossy Oak models: Steering Cover (709400939).

* *Installation of some accessories shown may impact vehicle compliance with some regulations. Consult your local dealer for information.*

HANDLEBARS & MIRRORS

Handlebar Wind Deflectors

G2, G2L, G2S

- Rugged injected plastic construction with Can-Am logo.
- Include removable cap for air flow adjustment.
- Mounting kit sold separately.

715000525 • Black / Yellow
715001706 • Black / Black
715003811 • Can-Am Red / Black
715003812 • Manta Green / Black
715003814 • Octane Blue / Black
715006118 • Viper Red / Black

Passenger Wind Deflectors

G2 and G2L (MAX models only) | **715001669**

- These wind deflectors fit on the passenger handles and provide greater comfort while riding.
- Easy to install and remove.

Full Wrap Aluminum Mounting Kit

G2, G2L, G2S | **715001378**

- Lightweight black die cast aluminum construction.
- Includes complete hardware.
- Handlebar wind deflectors sold separately.

Aluminum Tapered Handlebar

G2, G2L, G2S | **715000550**

- ⅞" – 1⅛" (22 mm – 28 mm) tapered handlebar made of 6061-T6 aluminum.
- Includes all hardware, center steering foam and cover.

Mirrors Left – ⅜" (10 mm)

G2, G2L, G2S | **708200963**

- Adjustable handlebar mounted convex mirrors.
- The convex surface allows improved visibility with a wider field of view.
- Matte finish.
- Stem includes ⅜" (10 mm) thread.

Required for installation:
- DS 450 models: Bracket (715000190).
- Bracket not required for installation on Outlander and Renegade.

Mirrors Right – ⅜" (10 mm)
(Not illustrated)

G2, G2L, G2S | **709400523**

- True vision surface 5" x 3" (13 cm x 8 cm).
- Matte finish.
- Stem includes ⅜" (10 mm) thread.

Required for installation:
- Bracket (715000190) required except for vehicles with right hand brake.

Handlebar Mirrors

G2, G2L, G2S | **715005366**

- Adjustable handlebar mounted convex mirrors.
- The convex surface allows improved visibility with a wider field of view.
- Doesn't require a windshield or fairing to be mounted.
- Works with all windshield options.

SEATS

Outlander MAX Passenger Seat Kit

G2 2015 & up, G2L (MAX models only) | **715002373**

- Perfect to replace used or damaged passenger's seat.

Heavy-Duty Seat Cover

G2, G2L | **715007212**

- Heavy-duty materials to cover and protect the seat.
- Abrasion- and tear-resistant.
- Simply installs by stretching around the original seat; the elastic holds the cover securely in place.

HMWPE SKID PLATES

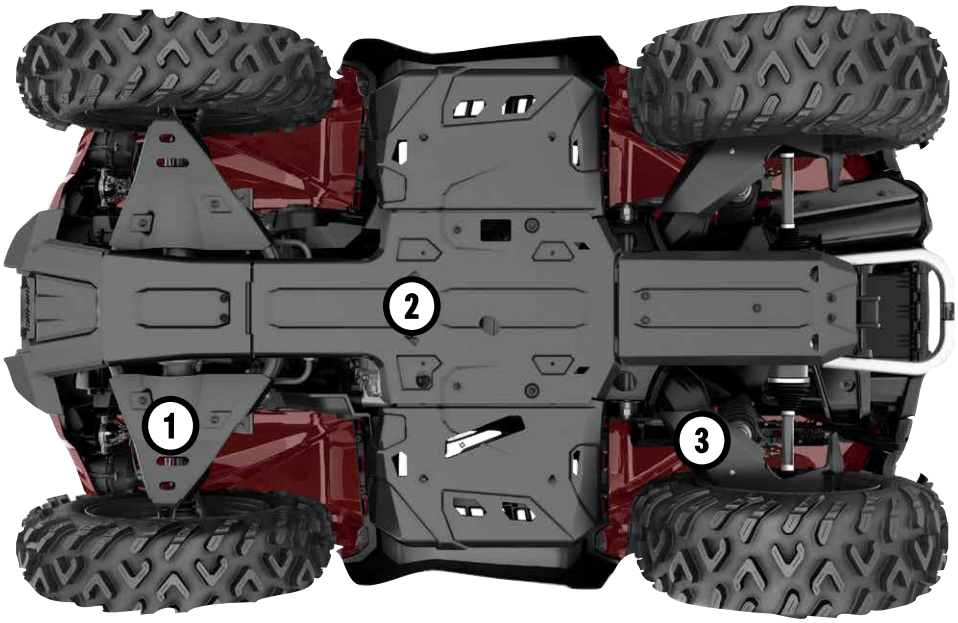

Our plastic plates glide smoothly and silently over obstacles, offering great protection in rough terrain. Made of ¼" (6 mm) thick abrasion-resistant thermoformed high molecular weight polyethylene (HMWPE).

- Lighter than aluminum.
- Superior stress crack resistance.
- High impact strength.

OUTLANDER, RENEGADE

	G2						G2L		G2S	
	2016 & Prior		2017–2018		2019 & Up				2017–2018	2019–2022
	Except MAX & X mr 1000R models	MAX & X mr 1000R models only	Except MAX & X mr 1000R models	MAX & X mr 1000R models only	Except MAX & X mr 1000R models	MAX & X mr 1000R models only	Except MAX models	MAX models only		
HMWPE SKID PLATE PROTECTION KIT										
	715004214	**715004215**	**715004209**	**715004210**	**715004806**	**715004807**	**715004211**	**715004212**	**715004213**	**715004809**
INDIVIDUAL HMWPE SKID PLATES										
① **A-Arm Protectors**	**715002924**	**715002924**	**715002924**	**715002924**	**715004822**	**715004822**	**715002924**	**715002924**	**715002924**	**715004822**
② **Underbelly Plates** Footwell portion not compatible with Renegade X mr	**715002926**	**715002927**	**715002926**	**715002927**	**715002926**	**715002927**	**715002928**	**715002929**	**715002974**	**715002974**
③ **Trailing Arm Protectors**	—	—	**715003466**	**715003466**	**715004823**	**715004823**	**715003466** (2015 to 2020 models only)	**715003466** (2015 to 2020 models only)	**715003466**	**715004823**

ALUMINUM SKID PLATES

For ultimate durability and strength, all our Aluminum Skid Plates are made with 3⁄16" (4.5 mm) thick high strength 5052 H32 aluminum.

- Ultimate durability.
- High strength.

OUTLANDER

	G2						G2L	
	2016 & prior		2017–2018		2019 & Up		Any Year	
	Except MAX & X mr 1000R models	MAX & X mr 1000R models only	Except MAX & X mr 1000R models	MAX & X mr 1000R models only	Except MAX & X mr 1000R models	MAX & X mr 1000R models only	Except MAX models	MAX models only
ALUMINUM SKID PLATE PROTECTION KIT								
	715002137	715002138	715004197	715004198	715004804	715004805	715004199	715004200
INDIVIDUAL ALUMINUM SKID PLATES								
1 A-Arm Protectors	715001667	715001667	715001667	715001667	715004820	715004820	715001667	715001667
2 Front Skid Plate	715000926	715000926	715000926	715000926	715000926	715000926	715001906	715001906
3 Central Skid Plate	715002078	715002078	715002078	715002078	715002078	715002078	715002078	715002078
4 Footwell Protector Plates	715000922	715000922	715000922	715000922	715000922 (except X mr 850 models)	715000922	715000922	715000922
5 Trailing Arm Protectors	—	—	715008595	715008595	715004821	715004821	715008595	715008595
6 Rear Differential Protectors	715000920	715000920	715000920	715000920	715000920	715000920	715000920	715000920
7 Rear Skid Plate	715002028	715002029	715002028	715002029	715002028	715002029	715002028	715002029

ALUMINUM SKID PLATES

For ultimate durability and strength, all our Aluminum Skid Plates are made with 3⁄16" (4.5 mm) thick high strength 5052 H32 aluminum.

- Ultimate durability.
- High strength.

	RENEGADE			
	G2S			
	2016 & Prior	2017–2018	2019–2022	2023 & Up
ALUMINUM SKID PLATE PROTECTION KIT				
Not compatible on X mr models	715002139	715004201	715004808	715009730
INDIVIDUAL ALUMINUM SKID PLATES				
1 **A-Arm Protectors**	715001667	715001667	715004820	715004820
2 **Front Skid Plate**	715000925	715000925	715000925	715001906
3 **Central Skid Plate**	715002078	715002078	715002078	715002078
4 **Footwell Protector Plates** Not compatible on X mr models	715001359	715001359	715001359	715001359
5 **Trailing Arm Protectors**	—	715008595	715004821	715004821
6 **Rear Differential Protectors**	715000920	715000920	715000920	715000920
7 **Rear Skid Plate**	715002028	715002028	715002028	715002028

HMWPE & ALUMINUM SKID PLATES

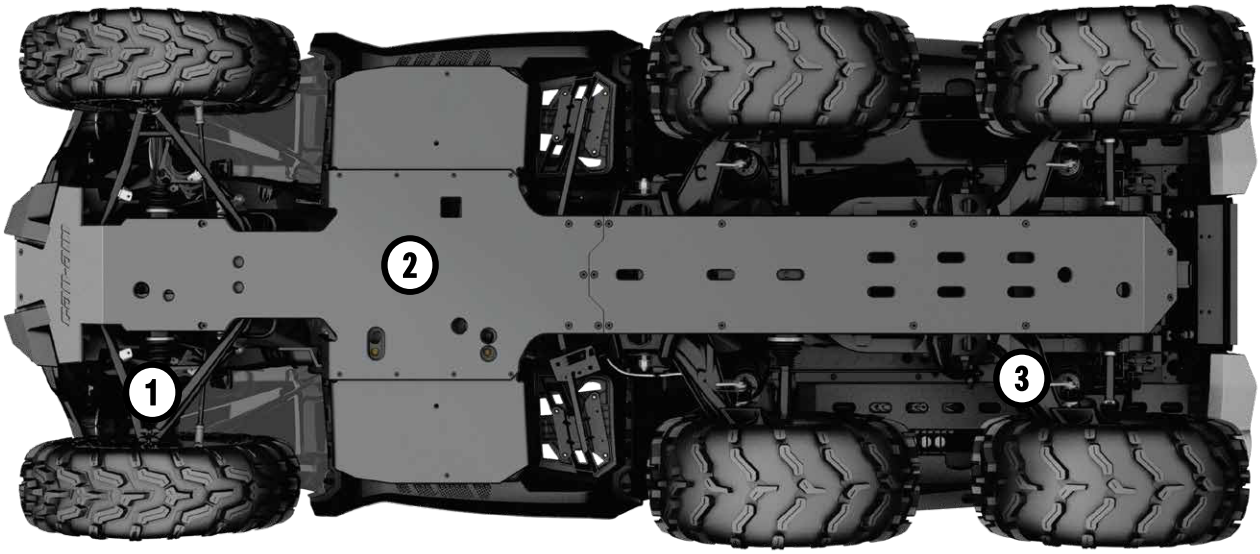

Our Plastic and Aluminum Plates glide smoothly and silently over obstacles, offering great protection in rough terrain.

HMWPE

Made of ¼" (6 mm) thick abrasion resistant thermoformed high molecular weight polyethylene (HMWPE).

- Lighter than aluminum.
- Superior stress crack resistance.
- High impact strength.

ALUMINUM

Made with high strength 3⁄16" (4.5 mm) thick 5052 H32 aluminum.

- Ultimate durability.
- High strength.

OUTLANDER 6X6

	G2 6X6			G2L 6X6
	2016 & Prior	2017–2018	2019 & Up	Any Year
INDIVIDUAL HMWPE SKID PLATES				
(1) **HMWPE A-Arm Protectors**	**715002924**	**715002924**	**715004822**	**715002924**
(2) **HDPE Full Underbelly Skid Plate**	**715005290** (except MAX)	**715005290**	**715005290** (except MAX)	**715005259** (MAX only)
	715005320 (MAX only)	**715005320**	**715005320** (MAX only)	
(3) **HMWPE Trailing Arm Protectors**	—	**715003466**	**715004823**	**715003466** (2020 models & prior only)
INDIVIDUAL ALUMINUM SKID PLATES				
(1) **Aluminum A-Arm Protectors**	**715001667**	**715001667**	**715004820**	**715001667**
(2) **Aluminum Full Underbelly Skid Plate**	—	—	—	—
(3) **Aluminum Trailing Arm Protectors**	—	**715008595**	**715004821**	**715008595**

PLASTIC SKID PLATES

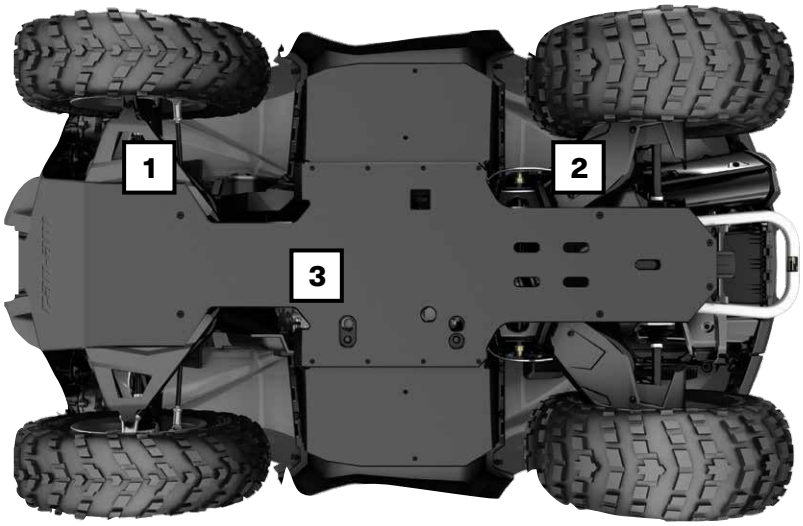

715003046

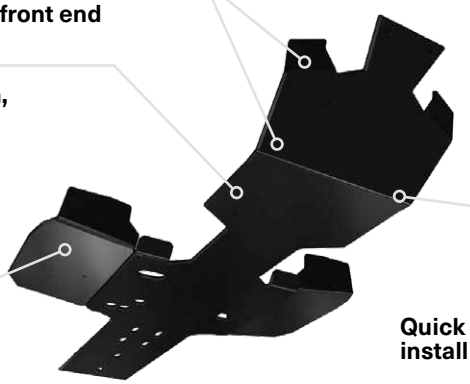

Our Plastic Plates glide smoothly and silently over obstacles, offering great protection in rough terrain. Made of abrasion-resistant thermoformed High Molecular Weight Polyethylene (HMWPE).

- Lighter than aluminum.

Offer your Outlander & Renegade the full protection kit or get them individually	Outlander	Outlander MAX	Outlander 6x6	G2, G2S	G2l	G2L MAX
INDIVIDUAL PLASTIC SKID PLATES						
1 A-Arm Protectors G2	715002924	715002924	715002924	715002924	_	_
2 Trailing Arm Protectors G2	715002925	_	715002925	715002925	_	_
3 PLASTIC SKID PLATE G2	715006019	715006020	715005290 715005320 (MAX)	_	715006115	715006116

BUMPERS & GUARDS

BUMPERS

Expedition Front Bumper

G2, G2L (except X mr models & X xc models 2022 & up)

715007233

- Made of 1.5" profiled steel tubes for complete protection of the vehicle's front.
- Protects and doesn't obstruct the vehicle's headlights.
- Integrated mounting spots for lights.
- Inside and outside anticorrosion coating with a durable powder coat finish.

Expedition Rear Bumper

G2, G2L

715007234

- Made of 1.5" profiled steel tubes for complete protection of the vehicle's rear.
- Protects and doesn't obstruct the vehicle's taillights.
- Inside and outside anticorrosion coating with a durable powder coat finish.

Required for installation:
- G2 base and DPS models: LH Rear Bracket (705008164) and RH Rear Bracket (705008165).

X mr Front Bumper

G2S 2023 & up

715008198

- Enhanced vehicle front protection. Required as a mounting point for Radiator Relocator (715008898).

XT Front Bumper

G2

715004837

- Provides additional protection against obstacles.
- Tough and durable, can be added on base Outlander model to convert vehicle into XT model.
- Standard on XT, XT-P, Mossy Oak and Limited models.
- Large tube construction with textured black finish and metal corners.

XT Rear Bumper

G2

715004920

- Provides additional protection against obstacles.
- Tough and durable, can be added on base Outlander model to convert vehicle into XT model.
- Standard on XT, XT-P, Mossy Oak and Limited models.
- Large tube construction with textured black finish and metal corners.

XT Front Bumper

G2L

715001910

- Winch compatible.
- Large tube construction.
- Protects vehicle against obstacles.
- Standard on XT models.

XT Rear Bumper

G2L

715001911

- Large tube construction.
- Protects vehicle against obstacles.
- Standard on XT models.

Extreme Front Bumper *

G2	**715001286***
G2L	**715004279**

- Ultra-sturdy build.
- Enhances front-vehicle protection.
- Compatible with XT Front Bumper.
- Fits the Apache™ 360 Track System (when side panels are removed).

***Not compatible with:**
- Front Hitch.

Rancher Rear Bumper *

G2, G2L (except 6x6 models) — **715003462**

- Ideal for using your ATV within cattle herds and guarding the safety of both the vehicle and the animals.
- Coverage extends to provide an extra layer of defense to your taillights.
- Inside and outside anti-corrosion coating with durable powder coat finish.

Not compatible with:
- Track systems.

GUARDS

Body Side Protector

G2 2019 & up with XT Bumpers (except X mr, 6x6 and MAX models) — **715004940***

- Heavy-duty fender guard designed to pull double duty, protecting your ATV and also enhancing the look of your ATV.
- Made tough and designed to deliver a rugged appearance, this fender guard offers full side protection for farmer, rancher and forestry applications.
- Durable and bold 1.25" (3 cm) diameter steel-tube construction, with inside and outside anti-corrosion coating with durable powder coat finish.

Required for installation:
- XT Front and Rear Bumpers.

Not compatible with:
- Self Clearing Footwell.
- Front and Rear Rancher Bumpers.

Body Side Protector Extensions
(Not illustrated)

G2, G2L (MAX models only) — **715003460**

- This specially designed extension for the Body Side Protector is made specifically to fit and seamlessly integrate into the look of Outlander MAX models.

Mud Flaps

G2 (with stock fender flares) — **715007089**

- Keep mud, snow and debris out of cargo area and protect trailer and vehicles behind you.
- Add aesthetic appearance to your vehicle.
- Sold in pairs.

Required for installation:
- Stock fender flares.

Fender Flares

G2 2012–2018 (except with 30" tires) (except 6x6 models)	**715001764***
G2 2019 & up (with 30" tires) (except 6x6 models)	**715004250****
G2L	**715001909*****
G2L European vehicles only 2015 & up	**715004487**

- Kit designed to deliver extra protection from dirt and debris, therefore a must if you enjoy riding in the mud.
- Made of injected plastic that hugs your vehicle fenders perfectly.
- Give vehicle added flair for that rugged cool look.
- Include front and rear extensions and all mounting hardware.

**Comes stock on G2 models 2019 & up (except X mr models).*
***Standard on G2 X mr 1000R.*
****Not compatible with European vehicles.*

Fender Flare Extensions

G2 (except 6x6 models) — **715005111***

- Block terrain debris from kicking up onto you as you ride or damaging your vehicle thanks to these extra-large Fender Flare Extensions, which also include mud flaps for added protection from mud/snow, especially when riding with track kits.
- Made of high molecular weight polyethylene (HMWPE) for advanced abrasion resistance.
- Include front and rear extensions.

**Must be used with Fender Flares for G2 (715001764).*

Fender Flares

G2S (except X mr models) — **705012695**

- Integrated extended Fender Flares for sporty look and full body protection from dirt and water.
- Include front and rear extensions and all mounting hardware.

** Installation of some accessories shown may impact vehicle compliance with some regulations. Consult your local dealer for information.*

Flatbed Protection Tubes

G2 (6x6 models only) | **715002030**

- Bolt-on bumpers for the sides of the 6x6 flatbed.
- Protect the exterior plastic components of the flatbed from rocks, trees and other obstacles when traversing enclosed areas or loading cargo onto the bed.

Flatbed Protection Tubes

G2L (6x6 models only) | **715005266**

- Bolt-on bumpers for the sides of the 6x6 flatbed.
- Protect the exterior plastic components of the flatbed from rocks, trees and other obstacles when traversing enclosed areas or loading cargo onto the bed.

LIGHTS & ELECTRICAL

Integrated Heated Grips & Thumb Throttle Combo

G2, G2L, G2S (2024 & up) | **715009284**

- Heat levels for grips and thumb displayed on vehicle screen.
- Ergonomic button integrated on LH grip.
- Single button for both grips and thumb heat selection.*
- Five temperature settings for the thumb and grips.
- Adjustable heat ratio between grip and thumb warmer.*
- Hold button to reach maximum heat quickly.
- Remembers your last heat setting.
- IP67-rated waterproof sealing keeps the elements out.
- ECE compliant.
- Plug-and-play installation.
- Clamp-on grips, no glue required.

** Models with touchscreen or color display provide enhanced user interface with independent grips and thumb heat level selection.*

Heated Grips & Thumb Throttle Combo

G2, G2L, G2S	**715003250** Not compatible with Intelligent Throttle Control (iTC™)
G2, G2L, G2S (2022 & up)	**715010553** Compatible with Intelligent Throttle Control (iTC™)

- LED dimmer facilitates reading temperature settings.
- 4 temperature settings with individual controls for thumb and grips.
- Returns to previous heat setting.
- One-touch shutdown.

Required for installation:
- G2L models: Wiring Cable.

Wiring Cable
(Not illustrated)

G2L | **710004567**

- Required for installation of Heated Hand Grips and Throttle Combo.

Heated Visor Outlet

G2, G2L | **715001246**

- Strategically positioned on vehicle to maintain your agility.
- Optional visor outlet that delivers fog-free riding.
- Quick and easy installation.
- Sold individually.
- Heated Visor not included.

Heated Passenger Grips & Visor Outlet

G2, G2L (MAX models only) | **715008794**

- Replace your stock passenger handles.
- Dual temperature switch integrated into seat arm for 3-zone heated handles and grips.
- Heated visor outlet integrated into seat arm.

USB Power Outlet Kit

G2, G2L, G2S | **219400510**

- Recharges your electronic devices while riding* (smartphone, MP3, heating gear, etc.).
- Dual port USB connectors.
- Plug-and-play kit.

** The power outlet is not capable of recharging all device types while riding.*

Seat Heater

G2, G2L | **715007211**

- 25 W seat heater delivers chill-free riding comfort.
- One temperature only.
- Heated pad and electrical harness only.

Required for installation:
- Heavy Duty Seat Cover (715007212).

Bluetooth Handlebar Soundbar by MTX

G2, G2L, G2S | **219400840**

- Bluetooth speaker with the unbeatable convenience of fingertip control.
- Rugged IP66-rated weather-resistant speaker designed for outdoor use.
- Driven by 150 watts of quality audio power.
- Seamless integration and operation from Bluetooth enabled devices.
- Includes input, ground and ignition wires, plus auxiliary port and 3.5" (8.89 cm) connector cable.
- CE compliant.

Not compatible with:
- XT Handlebar Protector Kit.

Note: We recommend you use 320 kbps MP3, 192–256 kbps AAC or AIFF, WAV formats to match the potential of the speaker. More compressed formats will probably have degraded sound quality.

Electronic Device Holder

G2, G2L (except 6x6 & X mr models) | **715004919**

- Robust injected-polypropylene construction allows for the right fit and easy installation.
- Adjustable unit safely holds smartphones or small tablets with a length or width mesuring between 2.9" (7.5 cm) and 5.1" (13.0 cm) with or without protective case.
- Integrated storage (0.6 gal / 2.1 L).
- Guiding wire grooves to pass charging cable through the lid.
- Possibility of relocating 12 V power outlet or installing USB outlet in storage compartment (USB power outlet sold separately).

Not compatible with:
- Windshields or Snorkel Kit.

3.5" (9 cm) LED Lights (2 X 14 W) LED Driving Lights

G2, G2L (except X mr models) | **715010094**

- 14 W LED lights producing 1,260 lumens each.
- Equipped with 6 high power LEDs in a heavy-duty die cast aluminum housing.
- Features 2 attachment points — if one attachment point fails due to a collision, rotate to the next channel point and re-mount the light.
- Sold in pairs.
- ECE R10 Certified.
- Spot lens for a narrow and long light beam spread, ideal when driving at higher speeds.

Required for installation:
- Expedition Front Bumper (715007233) and Light Power Cable (715007275).

3.5" (9 cm) LED Flood Lights (2 X 14 W)

G2, G2L (except X mr models) | **715010093**

- 14 W LED lights producing 1,260 lumens each.
- Equipped with 6 high power LEDs in a heavy-duty die cast aluminum housing.
- Features 2 attachment points — if one attachment point fails due to a collision, rotate to the next channel point and re-mount the light.
- Sold in pairs.
- ECE R10 Certified.
- Flood lens for a wide light beam spread, ideal for working applications like plowing or for winding, dusty or foggy riding conditions.

Required for installation:
- Expedition Front Bumper (715007233) and Light Power Cable (715007275).

4" (10 cm) Round LED Lights (2 x 25 W)

G2, G2L (except X mr models) | **715002935**

- 25 W LED spotlights.
- 1,800 lumens.
- Rugged and waterproof.
- Includes basic wiring and switch.
- Can-Am branded grill.
- Sold in pairs.
- Not ECE Certified.

Required for installation:
- Expedition Front Bumper (715007233) and Light Power Cable (715007275).

10" (25 cm) Double Stacked LED Light Bar (60 W)

G2, G2L (except X mr models) | **715010065**

- Equipped with twelve 5 W Cree LEDs.
- 5,400 lumens.
- Packs a big punch for its size.
- Rugged and waterproof.
- Can be installed on front bumpers, sport roof and Bimini roof with sun visor.
- Lights up to more than 1,500 ft (460 m) in front of the vehicle and around 65 ft (20 m) wide on each side.
- ECE R10 Certified.

Required for installation:
- Expedition Front Bumper (715007233) and Light Power Cable (715007275).

Light Power Cable
(Not illustrated)

G2, G2L | **715007275**

- Required for installation of the 10" (25 cm) LED Light Bar and the 3.5" (9 cm) and 4" (10 cm) LED Lights.

Baja Designs High Beam Kit

G2 (2022 and prior) | **715004284**

- Thanks to their direct bolt-on and plug-and-play installation right into the original high beam location, upgrading from your stock high beam lights to these powerful Baja Designs Squadron Pro LED Lights becomes child's play.
- Each spot is equipped with 4 Cree LEDs producing 4,900 lumens at 40 watts.
- Driving/Combo light pattern for smooth blend of light for both near field applications and distance.

2" (5 cm) Square LED Lights (2 X 10 W)

G2, G2L, G2S | **715004293**

- 2 x 900 lumens 10 W LED Cree light kit.
- Long-range illumination up to 350' (107 m), drawing less than 1 amp per light.
- Multi-Position Light Mount Kit is required for installation.
- Not ECE Certified.

Multi Position Light Mount Kit

G2, G2L, G2S | **715004274**

- Multi-position plastic clamps that fit on various tubing sizes: 0.75" to 1.5" (19 mm to 38 mm).
- Required for the installation of the 2" (5 cm) Square LED Lights (2 x 10 W).
- Kit includes tube clamp mounts and power cables.

RAM† LED Spotlight

G2, G2L, G2S | **710005423**

- 540-lumen (9 W) heavy-duty LED spotlight standard-equipped with 1" (2.5 cm) diameter rubber-coated double ball and socket system.
- Not ECE Certified.

RAM Mount for Cellphone Holder

G2, G2L, G2S | **715001985**

- Convenient bracket for installing the Cellphone Holder (715008786) (not included) onto your unit's handlebar.

C-TEK charger

860200997

- ·CTEK, the manufacturer of the smartest battery chargers in the world, has produced a BRP specific charger for all BRP products.
- ·Charger is built to meet the demanding arctic conditions.
- ·Ask your dealer for more information.

Digitally Encoded Security System (D.E.S.S.™) Green Key

G2, G2S (2018 & up) | **710005232**

- Anti-theft technology, Digitally Encoded Security System (D.E.S.S.™) key snaps easily on the vehicle and provides riders with easy and quick starts every time.
- The key communicates with the vehicle wirelessly so the vehicle starts only when the key code matches the vehicle, for ultimate peace of mind.
- The Programmable D.E.S.S.™ Key can also be programmed in 3 modes:
  - Work mode: limits vehicle speed to 40 kph (25 mph) but does not limit engine torque.
  - Normal mode: limits vehicle speed to 70 kph (44 mph) and 50% torque reduction.
  - Performance mode: no restrictions.

WINCHES

CAN-AM HD WINCHES

Can-Am HD 2500 Winch

G2, G2L (except T-cat 2022 & up) | **715006414**

- Heavy-duty four-way roller fairlead.
- Ergonomic clutch handle.
- Rugged all-steel gears and bushings provide more torque and longer life.
- Automatic 100% load-holding brake.
- Sealed solenoid for all-weather protection.
- Wired Remote Control sold separately.
- Plug-and-play wiring and attachment brackets.
- Weather-sealed handlebar-mounted switch.
- Pulling strength capability of 2,500 lb (1,134 kg).
- 50 ft. of 3⁄16" (15.2 m of 4.8 mm) wire steel cable.
- CE & UKCA compliant.

Can-Am HD 3500 Winch

G2, G2L (except T-cat 2022 & up) | **715006415**

- Heavy-duty four-way roller fairlead.
- Ergonomic clutch handle.
- Rugged all-steel gears and bushings provide more torque and longer life.
- Automatic 100% load-holding brake.
- Sealed solenoid for all-weather protection.
- Wired Remote Control sold separately.
- Plug-and-play wiring and attachment brackets.
- Weather-sealed handlebar-mounted switch.
- Pulling strength capability of 3,500 lb (1,588 kg).
- 50 ft. of 7⁄32" (15.2 m of 5.4 mm) wire steel cable.
- CE & UKCA compliant.

Can-Am HD 2500 Winch

T-cat 2022 & up and G2L XU (INT) | **715008140**

- Heavy-duty four-way roller fairlead.
- Ergonomic clutch handle.
- Rugged all-steel gears and bushings provide more torque and longer life.
- Automatic 100% load-holding brake.
- Sealed solenoid for all-weather protection.
- Wired Remote Control sold separately.
- Weather-sealed handlebar-mounted switch.
- Wire Harness (715007746) required for G2.
- Wire Harness (715002453) required for G2L
- CE & UKCA compliant.

Can-Am HD 3500 Winch

T-cat 2022 & up and G2L XU (INT) | **715008141**

- Heavy-duty four-way roller fairlead.
- Ergonomic clutch handle.
- Rugged all-steel gears and bushings provide more torque and longer life.
- Automatic 100% load-holding brake.
- Sealed solenoid for all-weather protection.
- Wired Remote Control sold separately.
- Weather-sealed handlebar-mounted switch.
- Wire Harness (715007746) required for G2.
- ·Wire Harness (715002453) required for G2L
- CE & UKCA compliant.

Rear winch kit

G2 (except 6x6 models)	**715007100**
G2 (6x6 models only)	**715006503**
G2L (6x6 models only)	**715007099**

- The remote-controlled rear winch is a godsend when youwant to pull yourself out of a tough spot or move heavy loads.
- Includes a fully-sealed Warn winch and all wiring and hardware needed for an easy and quick installation.
- Pulling strength capability of 3,000 lb (1,361 kg).
- 50 ft. of 7⁄32" (15.2 m of 5.5 mm) wire steel cable.

WINCH ACCESSORIES

Wireless Winch Remote

Can-Am HD Winches | **715008286**

- On/Off and Winch In/Winch Out buttons with LED indicator light.
- Large Winch In/Winch Out buttons for easy activation with gloves.
- Ergonomic remote handle shape with a trigger-like holding protrusion.
- Quick and easy to install, thanks to a wiring harness with an integrated antenna and all necessary mounting hardware.
- Allows you to operate your winch from anywhere within a 50' (15.2 m) radius, increasing your recovery options.
- All components are IP67 sealing rated.
- The remote also floats in case it's dropped during a deep water recovery.
- Dash and handlebar mounting options.
- Compatible with all Can-Am HD winches.

Wired Remote Control

WARN Winches	**715006378**
Can-Am HD Winches (715006414 & 715006415)	**715006555**
Can-Am HD Winches (715008140 & 715008141)	**715008121**

- This kit allows owners to add a handheld remote to their winch or stock winch.
- Works with the handlebar-mounted switch.
- Wired Remote and Remote Socket included.
- 10 ft. wire.

Winch Accessories Kit

715002409

- Get the most out of your winch.
- Double your pulling power, change your pulling direction and keep your winch in proper working order.
- Includes tree straps, snatch block, shackle and winching gloves.

NEW Can-Am HD Winch Hook

Can-Am HD Winch | **715011610**

- Heavy-duty, forged and heat-treated steel hook for maximum strength.
- Unique and premium design with a Can-Am-stamped logo.
- Durable cast-aluminum latch with a functional 1" opening.
- Integrated pulling strap for quick and easy handling.
- Finished with a platinum-silver powder coating for long-lasting protection.

WARN Hawse Fairlead

WARN Winches | **715007698**

- Double powder-coated construction.
- Required to use the Synthetic Winch Cable (715004254) on WARN winches.
- To be used with synthetic winch cables only.

Roller Fairlead

WARN Winches	**715007699**
Can-Am HD Winch	**710007459**

- Features top, bottom and side rollers for less cable wear and smoother operation from any direction for easier winching.

Hook with Safety Latch & Strap Kit
(Not illustrated)

Can-Am HD Winches | **705014949**

- Heavy-duty winch-rope hook with stainless steel snap.
- Includes a nylon safety strap.

Replacement Wire Rope – Can-Am HD

705014983
705014984

- Play it safe, always carry a replacement wire rope.
- 2,500 lb (1,134 kg) pulling strength with 50 ft of 3⁄16" (15.2 m of 4.8 mm) wire rope for 705014983.
- 3,500 lb (1,588 kg) pulling strength with 50 ft of 7⁄32" (15.2 m of 5.5 mm) wire rope for 705014984.

Replacement Wire Rope – ATV WARN Winches

715006256

- Play it safe, always carry a replacement wire rope.
- 3,500 lb (1,588 kg) pulling strength.
- 50 ft. of 7⁄32" (15.2 m of 5.5 mm) aircraft grade steel wire.

Synthetic Winch Cable

ATV WARN Winches | **715004254**

- Easier to manipulate than steel cable.
- Replaces the original cable on any factory installed WARN winch or sold as an accessory by BRP.
- Kit includes synthetic rope and rock guard sleeve.
- Always use with the new Hawse Fairlead (715007698).
- 50 ft. (15.2 m) of 3⁄16" (15.2 m of 4.8 mm) synthetic rope.
- 3,500 lb (1,588 kg) pulling strength.

Winch Mounting Plate

G2S 2022 & prior | **715000927**

- Adds functionality to your Renegade.
- Fits Can-Am winches by WARN.

Winch Wire Harness
(Not illustrated)

G2 2021 & up, G2S 2021 & up and G2L | **715002453**

- Required plug-and-go wiring to install WARN winch only.
- Not required for Can-Am HD winches.

HITCHES

HITCHES

Rear Hitch

G2, G2L (except 6x6 models), G2S

715001925

- E-coat finish.
- Fixed hitch ball mounting bracket.
- Provides fixed mounting point for trailer ball to provide vehicle with towing capabilities.
- This hitch offers 1,300 lb (590 kg) of towing capacity.
- Hitch ball not included.

Front and Rear Hitch Drawbar

G2, G2L, G2S

715008350

- Standard on 2" (5 cm) receiver hitch.
- It offers 1,650 lb (750 kg) of towing capacity.
- Hitch ball not included.
- Forged steel.

HITCH ACCESSORIES

Rear Receiver Hitch

G2S 2012 with 800R or 1000 engines G2S 2013 & up, G2L & G2

715005186

- E-coat finish.
- Does not affect ground clearance.
- Trailer ball not included.
- On 4x4 use, this hitch offers 1,500 lb (680 kg) of towing capacity.
- On 6x6 use, this hitch offers 1,654 lb (750 kg) of towing capacity.
- Compliant with European T regulations.

Not compatible with:
- G2L models with Rear Skid Plates.

Front Receiver Hitch

G2

715000921

- Front receiver hitch for Outlander with or without a winch.
- This hitch offers 1,300 lb (590 kg) of towing capacity.
- Allows you to maneuver your trailer easily in tight, confined areas.
- Hitch bar sold separately.

Not compatible with:
- Extreme Front Bumper, Rancher Bumper or ProMount Plows.

Rubber Receiver Plug

705204503

- Rubber cap for 2" (5 cm) hitch receiver.

Front coupling device

T3

705205025

- Required for T3 models.

Multitrailer

619590024

- Bogie wheels updated to be more silent than before and now equipped with grease nipples.
- Product developed for heavy-duty use.
- 100% galvanized steel.
- Specifications: 12 mm polywood base, strong stand, movable attachment points (4 pc),
- tipping bed, removable sides and 4 pc timber holder.
- Underside of the bogie and frame designed to travel over stones and logs (no sharp edges).
- Bed length: 182 cm
- Bed width: 66 cm bottom / 95 cm top
- Bed height: 60 cm
- Weight: 200 kg with timber holders and sides

RECOVERY

NEW Can-Am Retractable Rope System

G2, G2L, G2S | **715010190**

- Tow a disabled vehicle easily.
- 11 ft self-retracting tow rope for quick and convenient operation.
- 13,000 lb (5,910 kg) rope breaking strength.
- 2,600 lb (1,180 kg) rope working load limit.*
- Ready to use with an integrated soft shackle for simple hookup.
- Rope is easy to replace with no threading required.
- Lightweight design makes it easier to carry, thanks to its built-in handle.
- Weight: 14.7 lb (6.67 kg)
- Compact design fits all Can-Am off-road hitch receivers and most units with a 2" receiver.
- Features a built-in tow hook.

Not compatible with:
- Can-Am Rear Winch (715007100, 715006503 and 715007099)

**Never exceed vehicle max towing capacity.*

NEW Can-Am Winch Accessory Kit

G2, G2L, G2S | **715010814**

- Complete recovery kit featuring a Can-Am Soft Shackle (715010577), Recovery Ring (715010836) and Tree Saver Strap.
- Durable Tree Saver Strap—8' x 3" wide with folded eyes and an abrasion guard.
- Includes a carrying bag to keep all components organized.
- For synthetic rope only.

NEW Can-Am Kinetic Recovery Kit

G2, G2L, G2S | **715010837**

- Includes a Kinetic Rope (715010835) and two Soft Shackles (715010577).
- Comes with a practical roll-top carrying bag that offers plenty of space to add additional recovery accessories.
- Features drain hole to allow water to escape.

NEW Can-Am Soft Shackle

G2, G2L, G2S | **715010577**

- ⅜ in. (9.5 mm) x 12 in. (30.4 cm) loop UHMWPE soft shackle.
- 21,000 lb (9,525 kg) breaking strength.
- 4,200 lb (1,905 kg) working load limit.
- Lightweight, ultra-strong 12-strand UHMWPE braid offers steel-like strength with added flexibility.
- Provides a quick, strong connection thanks to the “dog bone” rigid piece, which easily locks the loop.
- Protective covering to reduce early damage.

NEW 2" Soft Shackle Hitch Receiver

G2, G2L, G2S | **715010784**

- Provides a reliable recovery solution that plugs directly into any 2" receiver.
- 8,000 lb (3,636 kg) working load limit.
- Forged aluminum construction with a durable viper-red powder-coated finish.
- Easy installation: slide the shackle mount into the receiver and secure it with a hitch pin (not included).
- Compatible with the Can-Am Soft Shackle (715010577) for a complete recovery setup.

NEW Can-Am Kinetic Recovery Rope (⅝" x 25')

G2, G2L, G2S | **715010835**

- 15,000 lb (6,803 kg) breaking strength.
- 3,000 lb (1,360 kg) working load limit.
- Product size: ⅝" x 25' (16 mm x 7.6 m).
- Our kinetic energy rope stretches up to 30%.
- Each rope is built from heavy-duty synthetic fiber engineered to withstand repeated use in the harshest off-road conditions. Reinforced protective sleeves add extra durability and help guard against wear in high-friction areas.
- Kinetic ropes provide superior pulling power by stretching up to 30% to store and release kinetic energy.
- This controlled stretch reduces shock on both vehicles, making recoveries smoother and safer than traditional tow straps.
- From mud to sand to snow, these ropes deliver the forward momentum needed to break free.

NEW Recovery Ring

G2, G2L, G2S | **715010836**

- Change the direction of your pull.
- Machined from premium aluminum alloy.
- Features a black hard-anodized, ultra-smooth, low-friction finish that delivers long-lasting durability in a sleek design.
- This recovery ring is perfectly sized to fit the Can-Am Soft Shackle (715010577) and works flawlessly with synthetic winch ropes below ½".
- Working load limit: 6,600 lb.
- Minimum breaking strength: 33,000 lb.
- For use with synthetic winch rope only and a soft shackle.

PERFORMANCE

PERFORMANCE

Renegade Snorkel Kit *

G2S (2021 & up) | **715007083**

- Comprehensive kit.
- Extended air intakes and CVT exhaust.
- CVT outlet integrates into pod cover.
- Ideal for muddy conditions.

Renegade Radiator Relocator Kit *

G2S | **715008898**

- Relocates radiator to top mount position.
- Prevents cooling performance loss in muddy conditions.
- Uses existing radiator.
- Includes support, hardware and hoses.
- Engineered for easy cooling system bleeding and maintenance.
- Radiator not included.

Required for installation:
- G2S models (2022 and prior): Renegade Extreme Front Bumper (715002469).
- G2S (2023 and up): X mr Front Bumper (715008198) (except X mr).

Mud Strap

G2, G2L, G2S | **715003053**

- Convenient sturdy grab-handle.
- Lets drivers redistribute their weight for improved traction in demanding conditions.

Radiator Protector

G2, G2S (except G2S with 500 engine) | **715001744**

- Metal shield that mounts over radiator face, providing protection from stones and branches.

Outlander Snorkel Kit *

G2 2015 & up, G2L (except X mr & 6x6 models) | **715005999**

- Comprehensive kit.
- Extended air intakes and CVT exhaust.
- CVT outlet integrates into pod cover.
- Must be installed on a vehicle without XT Handlebar Protector Kit.
- Ideal for muddy conditions.

Not compatible with:
- Windshields.

Outlander Snorkel Kit *

G2 (X mr models only), G2L (X mr models only) | **715002518**

- Comprehensive kit.
- Extended air intakes and CVT exhaust.
- CVT outlet integrates into pod cover.
- Must be installed on a vehicle without XT Handlebar Protector Kit.
- Ideal for muddy conditions.
- Raised horn only.
- Provides higher intake.
- For best fit and finish, appropriate gauge support is required.

Not compatible with:
- Windshields.

Outlander Radiator Relocator Kit *

G2, G2L (except X xc 2022 & up and 6x6 models) | **715001930**

- Relocates radiator to top mount position.
- Prevents cooling performance loss in muddy conditions.
- Uses existing radiator.
- Includes support, hardware and hoses.
- Engineered for easy cooling system bleeding and maintenance.
- Radiator not included.

X mr Traction Plates

G2 (MAX models only), G2L | **715001752**

- Provide extra foot grip for driver when riding in extreme mud conditions.
- Help driver maintain ideal riding position to maximize vehicle traction.
- Made of aluminum.
- Not meant for a passenger.

* *Installation of some accessories shown may impact vehicle compliance with some regulations. Consult your local dealer for information.*

Self-Clearing Footwells

G2 2015 & up, G2L	**715004759**

- Made from aluminum.
- Replace original footwells.
- Feature large evacuation ports to avoid mud and snow accumulation in footwells.
- Aggressive design for improved traction.
- Sold in pairs.

Not compatible with:
- Body Side Protectors.

Footpeg Kit

G2, G2L	**715001131**

- Provides maximum integrated grip and more stability during vigorous riding.
- Kick-up end generates added grip during hard cornering.
- Made of aluminum.
- Sold in pairs.

Foam Air Filter by Twin Air†

G2, G2S, G2L	**715001333**

- Maximizes performance by increasing air flow throughout RPM range.
- Maintenance-friendly, i.e., just wash, re-oil and re-use after riding in severely dusty/muddy environments.

Heavy-Duty Springs

G2 2012–2018 (Base model, DPS, XT, X mr with 650 engine only & Limited – except 6x6) G2S (Base model with 500 & 570 engines only)	**715003199** • Front
G2 2012–2018 (Base model, DPS, XT & X mr with 650 engine only – except 6x6) G2S (Base model with 500 & 570 engines only)	**715003200** • Rear
G2 2019 & up (Base, DPS & XT models, except 6x6)	**715005159** • Front & Rear

- Heavy-duty springs provide enhanced stiffness.
- Perfect for snow clearing and hauling heavy loads.
- Improve handling.
- Standard on Outlander PRO and Mossy Oak models.

Front Shock Covers

G2, G2L, G2S	**715500301**

- Feature ventilation holes.
- Offer added protection in rough terrain and weather conditions.
- Sold in pairs.

Front and Rear Heavy-Duty Shock kits

G2L (4x4 and 6x6 models)	**715007841** • Front
	715008136 • Rear

- Stiffer shocks than the standard ones, for Heavy-duty usage.
- Improved load capacity, ground clearance and comfort (front and rear).
- Sold in pairs.

Extreme Heavy-Duty rear spring set

G2	**715001998**

- E.g. for use with Forest Pro Log Trailer.

COVERS, DECALS & ADD-ONS

Trailering Cover

G2 (except MAX models)	**715001737**
G2 (MAX and X mr 1000R models only)	**715001736**
G2L (except MAX models)	**715002026**
G2L (MAX models only)	**715002025**

- Heavy-duty canvas made of UV-resistant solution-dyed polyester.
- Protect windshield and colored panels from abrasion.
- All high-abrasion areas are reinforced with a double canvas layer.
- Opening for fuel cap access.
- Weather-resistant trailering cover protects your vehicle during transportation.
- Quick and easy installation.
- Designed to perfectly fit your vehicle with or without Can-Am accessories.

Heavy-Duty Seat Cover

G2, G2L	**715007212**

- Heavy-duty materials to cover and protect the seat.
- Abrasion- and tear-resistant.
- Simply installs by stretching around the original seat; the elastic holds the cover securely in place.

Storage Cover

G2, G2L, G2 X mr (except 1000), G2L X mr, G2S, G2S X mr	**715001720**
G2, G2L (MAX and X mr 1000R models only)	**715001668**
G2 (6x6 models only)	**715005095**
G2L (6x6 models only)	**715005261**
G2L MAX (6x6 models only)	**715006024**

- Weather-resistant storage covers.
- For vehicle storage only.
- UV-resistant solution-dyed polyester construction.
- Quick and easy installation.
- Designed to perfectly fit your vehicle with or without Can-Am accessories.

Flag

715000277 • Yellow

- Make sure everyone knows what you're riding.
- Perfect for the dunes and new riders.
- 5' 6" (1.7 m) length.
- Includes Flag Mount (715000127).

Bolt-On† Retractable Ratcheting Tie-Downs

G2, G2L, G2S	**295101072**

- Perfect for transporting your powersport vehicle or securing loads.
- Mount easily: bolt on any flat surface (e.g., truck bed or frame).
- 1" x 6' (2.5 cm x 1.8 m) tie-down strap with heavy-duty stitching that delivers a 500 lb (226 kg) working load strength and 1,500 lb (680 kg) break strength.
- Convenient retractable push button automatically slackens, spools and stores away strap, while the ratchet mechanism tightens the strap snugly to secure your vehicle or load into place.
- Rubber ratcheting handle provides firm grip, and the hook is vinyl coated to protect whatever surface it hooks into.
- Sold in pairs.

Ratchet Tie-Downs

715008309 • Black/Gray

- 400 lb (181 kg) safe working load.
- 1" x 10' (2.5 cm x 3 m) strap with Can-Am, Sea-Doo and Ski-Doo logos.
- Deluxe ratchet with rubber handle.
- Coated S hooks.
- Pack of 2.

Heavy-Duty Ratchet Tie-Down

715008308

- 1,000 lb (454 kg) safe working load.
- 1.5" x 6' (38 mm x 1.8 m) strap with BRP brands.
- Deluxe ratchet with rubber handle.
- Black-coated clip hooks.
- 12" (300 mm) webbing included.
- Pack of two.

Shifter Lock

G2, G2L	**715007337** **619590085** • (Scandinavia)

- Secure the vehicle's shifter by locking it in position.
- Prevents the vehicle from going into neutral without the lock key.

Lockable Gas Tank Cap

G2, G2L, G2S	**860200387**

- Protects your fuel.
- Meets EPA requirements.

License Plate Bracket

G2S	**715001401**
G2L	**715002498**

- Provides specific area to install license plate.
- Mounts to rear of vehicle.

APACHE TRACK SYSTEMS

APACHE TRACK SYSTEMS

Apache Backcountry Track System *

G2 (except 6x6 models), G2L, G2S | **715005247**

- Designed to deliver the best flotation level and deep-snow performance on the market.
- Contact patch is 23% bigger than the Apache 360 LT.
- Impressive added ground clearance of 7" (18 cm), keeps the vehicle out of deep snow.
- Aggressive track design with 2" (5 cm) lug height for maximum traction on snow.
- For winter use only.

Required for installation:
- Apache Backcountry Mounting Kit and engine and air intake pre-filters.

Apache Backcountry Mounting Kit *
(Not illustrated)

G2 2018 & prior, G2S 2018 & prior, G2L	**715004830**
G2 2019 & up, G2S 2019 & up	**715004796**

- Required for installation of the Apache Backcountry Track System.

Required for installation:
- DPS module and engine and CVT pre-filter.

APACHE XC AND XC LT

Apache XC LT Track System *

G2 2019 & up, G2S 2019 & up | **715007719**

- Long Track version.
- Brand-new track design to optimize driving off and in deep snow conditions.
- Reduction in steering effort thanks to the tandem 4 wheels.
- Vibrations are reduced due to the alignment of the wheels with the rolling band of the track and the shaft damper mounted tandem.
- Better steering precision with this wheel and track alignment due to good ground contact.
- 1.25" (3.175 cm) lugs in the front and in the back for better traction and lateral stability.
- Track width: front 12.5" and rear 15".
- Adds 3" (7.62 cm) of ground clearance versus 27" tires.
- Additional shaft dampers, tandem dampers, track design and wheel layout significantly reduce NVH (noise vibration harshness).
- Central guide for optimized track alignment and reduced occurrences of detracking.
- Optimized track layout with increased angle of attack for better obstacle crossing and snow performance.
- Stamped and welded steel frame for improved strength and durability.
- Easy maintenance with replaceable hub and wheel bearings.
- Main hub is oil bath with 3 bearings inside for consistent lubrication.
- Mounting kit sold separately.

Required for installation:
- DPS module and engine and CVT pre-filter.

Apache XC Track System *

G2 2019 & up, G2S 2019 & up | **715008664**

- Brand-new track design to optimize driving off and in deep snow conditions.
- Reduction in steering effort thanks to the tandem 4 wheels.
- Vibrations are reduced due to the alignment of the wheels with the rolling band of the track and the shaft damper mounted tandem.
- Better steering precision with this wheel and track alignment due to good ground contact.
- 1.25" (3.175 cm) lugs in the front and in the back for better traction and lateral stability.
- Track width: front 12.5" and rear 15".
- Adds 3.25" of ground clearance vs. 25" tires.
- Additional shaft dampers, tandem dampers, track design and wheel layout significantly reduce NVH (noise vibration harshness).
- Central guide for optimized track alignment and reduced occurrences of detracking.
- Optimized track layout with increased angle of attack for better obstacle crossing and snow performance.
- Stamped and welded steel frame for improved strength and durability.
- Easy maintenance with replaceable hub and wheel bearings.
- Main hub is oil bath with 3 bearings inside for consistent lubrication.
- Mounting kit sold separately.

Required for installation:
- DPS module and engine and CVT pre-filter.

Apache XC & XC LT Mounting Kit *
(Not illustrated)

G2 2019 & up, G2S 2019 & up | **715008200**

- Required for installation of the Apache XC and XC LT Track System.
- Track DPS Module and Pre-Filter not included.

APACHE 360 & 360 LT

Apache 360 Track System *

G2 (except 6x6 models), G2L, G2S | **715006323**

- Multifunctional tracks perfect for any Can-Am ATV.
- Average ground clearance of 16" (41 cm).
- 1" (2.5 cm) lugs in the front and 1.25" (3.2 cm) in the back.
- Apache 360 and 360 LT Mounting Kit and engine and air intake pre-filters are required.
- EC compliant.

* *Installation of some accessories shown may impact vehicle compliance with some regulations. Consult your local dealer for information.*

Apache 360 LT Track System *

G2, G2L, G2S | **715005103**

- Multifunctional tracks designed to support heavy loads and to fit on most Can-Am Off-Road vehicles.
- Extra contact patch adjustment for better performance over rough terrain.
- Contact patch is 7 to 9% bigger than the Apache 360's. Average ground clearance of 16" (41 cm). 1" (2.5 cm) lugs in the front and 1.25" (3.2 cm) in the back.
- EC compliant.
- ATV: Apache 360 and 360 LT Mounting Kit, Track DPS Module and Engine and CVT air intake pre-filters are required and sold separately.

APACHE 360 LT 6X6

Apache 360 LT (6x6) Track System *

G2, G2L (6x6 only) | **715005104**

- Multifunctional tracks designed to support heavy loads and to fit on most Can-Am Off-Road vehicles.
- Front wheel height adjustment provides enhanced attack angle and better performance over rough terrain when raised or increased contact patch for improved flotation when lowered.
- Average ground clearance increase of 4.5" (11.4 cm).
- 1" (2.5 cm) lugs in the front and 1.25" (3.2 cm) in the back.
- Reliable heavy-duty build.
- EC compliant.
- Exclusively for the Outlander 6x6.
- Recommended for use on snow only.

Required for installation:
- Apache 360 LT Mounting Kit, Track DPS Module and Engine and Pre-Filter Kit.

Apache 360 & 360 LT * Mounting Kit
(Not illustrated)

G2 2018 & prior (except 6x6 models), G2S 2018 & prior, G2L	**715007207**
G2 2019 & up (except 6x6 models), G2S 2019 & up	**715007206**
G2 2018 & prior, G2L (6x6 models)	**715004991**
G2 2019 & up (6x6 models)	**715005105**

- Required to install Apache 360 and 360 LT Track Systems.
- DPS module and pre-filter not included.

APACHE TRACK SYSTEM ACCESSORIES

Track DPS Module *
(Not illustrated)

G2, G2L, G2S | **715007338**

- An innovative DPS module that ensures speedometer accuracy and optimized steering assist, which make for perfect track control and riding ease.
- Required to install the Apache and Backcountry Track Systems.

Air Intake Pre-Filter

715003483

- Adds extra protection to your engine in harsh riding conditions.
- Filter blocks particles larger than 0.007" (0.19 mm).
- Easy, tool-less installation.
- Necessary to maintain vehicle warranty when tracks are installed.
- Required to install the Apache and Backcountry Track Systems.
- Standard on Outlander 650, 650 X mr, 850, 1000, 1000R engines and G2L PRO.

Not compatible with:
- Snorkel Kits.

Engine Air Intake Pre-Filter

G2, G2L, G2S | **715004729**

- Adds extra protection to your engine in harsh riding conditions.
- Filter blocks particles larger than 0.005" (0.13 mm).
- Necessary to maintain vehicle warranty when tracks are installed.

Idler Wheel Kit

Apache Backcountry Track System (rear tracks only) | **860201230** • 141 mm

- Reduces drag and rolling resistance.
- Includes 2 wheels, brackets and hardware.
- Add up to 2 kits per rear track.
- Can extend slider life in hardened snow conditions.

Slider with Vespel† Insert

Apache Backcountry Track System | **503194815**

- Use DuPont Vespel inserts for less friction.
- Longer life.
- Can be cut to desired length.
- 8 needed per vehicle.
- Sold individually.

* *Installation of some accessories shown may impact vehicle compliance with some regulations. Consult your local dealer for information.*

Rail Ice Scratchers	Apache Backcountry Track System	860201728

- Provide additional lubrication in hard and icy conditions.
- Rail mounted, small, light.
- Design expands on coil concept to allow reversing without damage.
- Easily stored when not in use.

APACHE TRACK SYSTEMS FITTING GUIDE

APACHE BACKCOUNTRY

Model Year / Model		Track	Track Mount	Track DPS Module	Prefilter without Snorkel	Prefilter with Snorkel
2015 & Up	G2L	715005247	715004830	715007338	715004729	715003483 (standard on G2 models and G2L PRO model)
2018 & Prior	G2, G2S					
2019 & Up	G2, G2S					
2019 & Up	G2 1000R	715005247 and 715005891	715004796			

APACHE XC AND XC LT

Model Year / Model		Track	Track Mount	Track DPS Module	Prefilter without Snorkel	Prefilter with Snorkel
2019 & Up	G2, G2S	715007719 and 715008664	715008200	715007338	715004729	715003483 (standard on G2 models and G2L PRO model)

APACHE 360 AND APACHE 360 LT

Model Year / Model		Track	Track Mount	Track DPS Module	Prefilter without Snorkel	Prefilter with Snorkel
2015 & Up	G2L	715006323 (Apache 360) OR 715005103 (Apache 360 LT)	715007207	715007338	715004729 & 715003483 (standard on G2 models and G2L PRO model)	715004729
2018 & Prior	G2, G2S					
2019 & Up	G2, G2S		715007206			

APACHE 360 LT 6X6

Model Year / Model		Track	Track Mount	Track DPS Module	Prefilter without Snorkel	Prefilter with Snorkel
2015 & Up	G2L	715005104	715004991	715007338	715004729 & 715003483 (standard on G2 models and G2L PRO model)	715004729
2018 & Prior	G2, G2L					
2019 & Up	G2		715005105			

PROMOUNT PLOWS

PROMOUNT PLOW KITS

REFERENCE CHART

	54" Black Steel	60" Black Steel	66" Black Steel	60" Flex2	66" Flex2
Plow Kit	715007753	715007754	715007755	715008181	715008182
Blade	715004472	715004202	715009881	715004203	715009883
Push Frame	715004980	715004980	715004980	715004980	715004980
Mounting Plate	715007751	715007751	715007751	715007751	715007751

STEEL PLOWS

Can-Am ProMount Steel Plow Kit
54" (137 cm) Blade

G2, G2L, G2S

■ **7715007753** • Black

- These kits include:
  - Can-Am ProMount Steel Blade
  - Push Frame with Quick-Attach System
  - Mounting Plate

Can-Am ProMount Steel Plow Kit
60" (152 cm) Blade

G2, G2L, G2S

■ **7715007754** • Black

- These kits include:
  - Can-Am ProMount Steel Blade
  - Push Frame with Quick-Attach System
  - Mounting Plate

Can-Am ProMount Steel Plow Kit
66" (168 cm) Blade

G2, G2L, G2S

■ **715007755** • Black

- These kits include:
  - Can-Am ProMount Steel Blade
  - Push Frame with Quick-Attach System
  - Mounting Plate

Can-Am ProMount Steel Blades
54" (137 cm) Blade

Fits ProMount Push Frame

■ **715004472** • Black

- Blades available individually to create your own kit.
- Compatible with Can-Am ProMount Blade accessories to further enhance plow versatility (some plow accessories are not compatible with 54" (137 cm) plows).
- Clears 50" (127 cm) when plow is fully angled.
- Blade height of 14.75" (37 cm).

Not compatible with:
- ProMount Drift Cutters, Blade Extensions and Edge Markers.

Can-Am ProMount Steel Blades
60" (152 cm) Blade

Fits ProMount Push Frame

■ **715004202** • Black

- Blades available individually to create your own kit.
- Compatible with Can-Am ProMount Blade accessories to further enhance plow versatility.
- Clears 54" (137 cm) when plow is fully angled.
- Blade height of 17" (43 cm).

Can-Am ProMount Steel Blades 66" (168 cm) Blade

Fits ProMount Push Frame

■ **715009881** • Black

- Blades available individually to create your own kit.
- Compatible with Can-Am ProMount Blade accessories to further enhance plow versatility.
- Clears 60" (152 cm) when plow is fully angled.
- Blade height of 17" (43 cm).

Can-Am ProMount Steel Blades 72" (183 cm) Blade

Fits ProMount Push Frame

■ **715009877** • Black

- Now with an improved shoe design for better flotation with an easy and quick tool-free adjustment.
- Plow blade made from 12-gauge steel.
- Replaceable wear blade.
- Large pin designed for easy blade rotation to eliminate snow buildup at pivot point.
- Blade design provides best snow roll-off at any angle.
- Clears 66" (168 cm) when plow is fully angled.
- Blade height of 17" (43 cm). Compatible with Can-Am ProMount Blade accessories to further enhance plow versatility.

CAN-AM ProMount FLEX2 PLOW KIT

Can-Am ProMount Flex2 – 60" (152 cm) Plow Kit

G2, G2L, G2S

■ **715008181**

- These kits include:
  - Can-Am ProMount Flex2 Blade
  - Push Frame with Quick-Attach System
  - Mounting Plate

Can-Am ProMount Flex2 – 66" (168 cm) Plow Kit

G2, G2L, G2S

■ **715008182**

- This kit includes:
  - Can-Am ProMount Flex2 Blade
  - Push Frame with Quick-Attach System
  - Mounting Plate

ANGLE PLOWS

Can-Am ProMount Angle Blade 60" (152 cm) Steel Oneway State

G2, G2L, G2S

715007261

- Make the job easier with the right tools, clear long alleys and make the task easier by sending the snow further out of the way.
- Wing end of plow measures 25" (63 cm) high and tapers down to 17" (43 cm).
- One-way “winged” state plow designed to throw snow higher.
- Rubber Flap (715007299) designed to keep snow away from the driver is offered as accessory (sold separately).
- Can-Am branded.

Can-Am ProMount Angle Blade 72" (183 cm) Steel Oneway State

G2, G2L, G2S

715009879

- Now with an improved shoe design for better flotation with an easy and quick tool-free adjustment.
- Make the job easier with the right tools, clear long alleys and make the task easier by sending the snow further out of the way.
- Wing end of plow measures 26" (67 cm) high and tapers down to 17" (43 cm).
- One-way “winged” state plow designed to throw snow higher.
- Rubber Flap (715007299) designed to keep snow away from the driver is offered as accessory (sold separately).
- Can-Am branded.

ProMount One-Way State Blade Rubber Flap

(Not illustrated)

715007299

- Allows for more efficient snow projections in various snow conditions.

CAN-AM ProMount FLEX2 PLOWS

Can-Am ProMount Flex2 60" (152 cm) Blade

Fits ProMount Push Frame

715004203

- Plow blade made of UHMWPE, flexible and impact absorbing material prevents damage to your plow when accidental impacts occur.
- Replaceable wear blade.
- Large pin designed for easy blade rotation to eliminate snow buildup at pivot point.
- Blade design provides best snow roll-off at any angle.
- Compatible with Can-Am ProMount Blade accessories to further enhance plow versatility.
- Clears 54" (137 cm) when plow is fully angled.
- Blade height of 17" (43 cm).

Can-Am ProMount Flex2 66" (168 cm) Blade

Fits ProMount Push Frame

715009883

- Plow blade made of UHMWPE, flexible and impact absorbing material prevents damage to your plow when accidental impact occurs.
- Replaceable wear blade.
- Large pin designed for easy blade rotation to eliminate snow buildup at pivot point.
- Blade design provides best snow roll-off at any angle.
- Clears 60" (152 cm) when plow is fully angled.
- Blade height of 17" (43 cm).
- Compatible with Can-Am ProMount Blade accessories to further enhance plow versatility.

Can-Am ProMount Flex2 72" (183 cm) Blade

Fits ProMount Push Frame

715009868

- Now with an improved shoe design for better flotation with an easy and quick tool-free adjustment.
- Plow blade made of UHMWPE, a flexible and impact absorbing material that prevents damage to your plow when accidental impacts occur.
- Replaceable wear blade.
- Large pin designed for easy blade rotation to eliminate snow buildup at pivot point.
- Blade design provides best snow roll-off at any angle.
- Compatible with Can-Am ProMount Blade accessories to further enhance plow versatility.
- Clears 66" (168 cm) when plow is fully angled.

CAN-AM ProMount PLOW ACCESSORIES

Can-Am ProMount Push Frame with Quick-Attach System

G2, G2L, G2S

715004980

- Heavy-duty steel tubes designed to withstand the roughest use.
- Mid-mount carriage provides ultimate push strength and traction.
- Designed for maximum plow lift height.
- Features a self aligning quick-attach system, an easy foot release pedal and an ergonomic handle for plow angle adjustment.
- Plow Roller Fairlead and Plow Limit Switch recommended to extend winch cable lifespan.
- Can-Am ProMount Mounting Plate required for installation.
- Blade swivels left or right, 5 positions.
- Large pin designed for easy blade rotation to eliminate dirt and snow buildup at pivot point.

Can-Am ProMount Mounting Plate

G2, G2L, G2S

715007751

- Required to install the Can-Am ProMount Push Frame with Quick-Attach System.
- Mounting plate precision-designed to stay on year round without compromising ground clearance.
- Fits on ATVs with or without Can-Am Skid Plates.
- Plow Roller Fairlead included.

Can-Am ProMount Push Frame Extension

G2, G2L, G2S

715006257

- 12" (30 cm) push frame extension.
- Required when plow is installed with Apache Track System.

Can-Am ProMount Plow Angling System

G2, G2L, G2S

715010904

- Improved operation speed for quicker plow angle adjustments.
- Converts your plow system into an easy-to-control unit from the driver's seat.
- Using one hand to control all plow motions will allow you to easily concentrate and manage your plowing tasks.
- Compatible with ProMount Blade.
- Winch and plow sold separately.

Required for installation:
- Push Frame (715010845).
- Push Frame Extension (715006257) is required for installation with the Front Rancher Bumper.

Not compatible with:
- Apache Backcountry LT Track System.

Plow Quick Adjust Blade Shoes

ProMount steel & Flex2 Blades 54" & 60" (all years), 66"& 72" (2025 & prior)

715009751

- Zinc-plated steel construction for corrosion resistance.
- Easy and quick tool-free adjustment.
- Pre-set adjustment for different heights.
- Larger shoe diameter for greater ground contact.
- Improved shoe design for better flotation.

Can-Am ProMount Edge Markers

G2, G2L, G2S

715004206

- Help locate the edges of your plow.
- Height: 24" (60 cm).
- Sold in pairs.
- Compatible with Can-Am ProMount Steel and Flex2 Blades with or without Blade Extensions (except for the Can-Am ProMount Steel 54" (137 cm) Blades).

Can-Am ProMount Drift Cutters

G2, G2L, G2S

715006258

- Help keep snow in the plow.
- Dimensions: 17" x 13" (43.2 cm x 33 cm).
- Sold in pairs.
- Compatible with Can-Am ProMount Steel and Flex2 Blades with or without Blade Extensions (except for the Can-Am ProMount Steel 54" (137 cm) Blades).

Can-Am ProMount Curved Wear Blade

G2, G2L, G2S

715007791 • 60" (152 cm)
715007792 • 66" (168 cm)

- Wear blade designed with a folded back bottom lip.
- The increased surface allows for less digging while plowing uneven surfaces.
- Ideal for snow covered gravel, grass, paver stone and other soft surfaces.

Can-Am ProMount Plastic Wear Blade

G2, G2L, G2S

715004480 • 54" (137 cm)
715004481 • 60" (152 cm)
715004482 • 66" (168 cm)
715004483 • 72" (183 cm)

- To help prevent scratches on smooth driveways and markable surfaces.

Back Drag Blade

ProMount Plows (60" and more)

715007794

- ¼" thick steel swivel scraper.
- Lifts up when the vehicle is moving forward so as to not affect the scraping.
- Increased capacity to pull snow.
- More aggressive scraping in reverse mode.
- Lifts the blade off the ground so that it scrapes evenly.
- Adjustable in length for compatibility with 60", 66" and 72" blades.
- Compatible with ProMount blades (Flex and Steel).

Plow Roller Fairlead

G2, G2L, G2S

705009222

- Larger diameter lower roller reduces wear on wire rope for plow application.
- Can be used with all ProMount plows.
- Included in Plow Mounting Plate Kit (715007751).

Pulley Kit for Alpine Super-Duty Plow

G2, G2L

715000279

- Pulley kit to be used in conjunction with the winch when using a snow plow.
- Recommended to increase winch efficiency.
- To be used with the XT Front Bumper.

Synthetic Winch Cable for Plowing

715000540

- Specially designed for plowing applications.
- 8' (2.4 m) section of durable, extra-strong synthetic rope.
- Stands up to repeated, sharp angle pulls used to lift heavy plow blades.
- Temporarily replace your winch rope for plow season to save wear and tear on wire rope.

Plow Limit Switch
(Not illustrated)

G2, G2L, G2S

715006259

- For controlling the cable tension when over-raising your plow system.
- Prevents winch, plow push frame and vehicle damage.

G3, G3L ACCESSORIES

G3, G3L ACCESSORIES

ATV Accessory Packages	52
LinQ Accessories	53
Cargo & Storage	66
Windshields	66
Handlebars & Mirrors	68
Skid Plates	70
Bumpers & Guards	72
Lights & Electrical	72
Audio	77
Winches	78
Hitches	80
Recovery	81
Performance	82
Covers & Add-Ons	84
Apache Track Systems	85
ProMount Plows	87

ATV ACCESSORY PACKAGES

UPGRADE YOUR RIDE. CHOOSE YOUR EXPERIENCE.

For details on the exact SKUs required for installation, please contact your authorised dealer, as additional components such as wiring harnesses, mounting brackets or vehicle specific hardware may be required.

ADVENTURE

Cargo & Storage	LinQ Tool Kit
	LinQ Trunk Box
	LinQ Fuel Caddy - 4 Gallons
Winches & Recovery	Can-Am HD 3500-S Winch*
	Can-Am Winch Accessory Kit
	Can-Am Retractable Rope System
Protections	Front Bumper*
	Rear Bumper*
	Skid Plate Kit*
	High Windshield Kit
	Aluminum Footpeg Kit
	Radiator Protector
Lights	SMART 10" (25 cm) LED Light Bar

*May already be included in certain vehicle models
**Some accessories require additional installation hardware

UTILITY

Cargo & Storage	LinQ Tool Kit
	LinQ Cargo Basket (90L)
	Tool Holder Bolt-on
	LinQ Gear Grips
	LinQ Lite Multi Holder (Front Fenders)
	LinQ Lite Fender Bag
Winches & Recovery	Can-Am HD 3500-S Winch*
	Can-Am HD Winch Auto-Stop
Protections	Front Bumper*
	Rear Bumper*
	Adjustable Adventure Low Windshield
	Console Extension
Lights	SMART 10" (25 cm) LED Light Bar

*May already be included in certain vehicle models
**Some accessories require additional installation hardware

FORESTY

Cargo & Storage	LinQ Tool Kit
	LinQ Chainsaw Holder
	LinQ Fuel Caddy - 4 Gallons
	Large Cargo Box or LinQ Cargo Basket (90L)
Winches & Recovery	Can-Am HD 3500-S Winch*
	Rear Winch
	Wireless Winch Remote
Protections	Front Bumper*
	Rear Bumper*
	Adventure High Windshield Hardcoated
	Console Extension
	Black Touring Handguard*
Lights	SMART 10" (25 cm) LED Light Bar

*May already be included in certain vehicle models
**Some accessories require additional installation hardware

HUNTING

Cargo & Storage	LinQ Gun Case
	LinQ Rack Extensions
	LinQ Lite Multi Holder (Front Fenders)
	LinQ Lite Fender Bag
Winches & Recovery	Can-Am HD 3500-S Winch*
	Rear Winch
	Wireless Winch Remote
Protections	Front Bumper*
	Rear Bumper*
	Skid Plate Kit
	Extra High Windshield Kit
Lights	SMART 10" (25 cm) LED Light Bar

*May already be included in certain vehicle models
**Some accessories require additional installation hardware

WINTER

Cargo & Storage	LinQ Trunk Box
	LinQ Lite Multi Holder (Front Fenders)
	LinQ Lite Fender Bag
Winches & Recovery	Can-Am HD 3500-S Winch*
	Can-Am HD Winch Auto-Stop*
	Can-Am Winch Accessory Kit
Protections	Front Bumper*
	Rear Bumper*
	Skid Plate Kit*
	Adventure High Windshield Hardcoated
	Console Extension
	Black Sport Handguards*
	Adventure Side Wind Deflectors
	Passenger Wind Deflectors
Lights	SMART 10" (25 cm) LED Light Bar
Winter Accessories	Integrated Heated Grips & Thumb Throttle Combo
	Heated Passenger Grips & Visor Outlet
	Seat Heater
	Heavy-Duty Seat Cover (Needed for the Seat Heater)
	Apache XC Track Kit
	Can-Am ProMount 60" (152 cm) Steel Plow Kit
	Can-Am ProMount Push Frame Extension

*May already be included in certain vehicle models
**Some accessories require additional installation hardware

G3 LINQ ACCESSORIES

ACCESSORY MOUNTING LOCATIONS AND REQUIREMENTS

LinQ ACCESSORIES WITH 16" BASE	1 Front Cargo Drop Down	2 Front Cargo Lid	3 Rear Cargo Drop Down	4 Rear Cargo Lid	LinQ Can Stack on Top
LinQ Rigid Cooler (18 L) 715010491	YES, with LinQ Base Installation Kit **860203055**	NO	YES, with LinQ Base Installation Kit **860203055**	NO	NO
LinQ Tool Box 715008111		YES, with LinQ Base Installation Kit **860203055**		YES, with LinQ Base Installation Kit **860203055**	
NEW LinQ Expandable Bag 4.5 US Gal (17 L) 860202895					
LinQ 5.3 Gal (20 L) Semi-Rigid Cooler 295101252					
LinQ 2.6 Gal (10 L) Modular Cargo Box 715005494					YES
LinQ 5 Gal (20 L) Modular Cargo Box 715007112					
LinQ 7.8 Gal (30 L) Modular Cargo Box 715006830			NO	NO	NO
LinQ Tool Kit 715006829			YES, with LinQ Base Installation Kit **860203055**	YES, with LinQ Base Installation Kit **860203055**	YES
LinQ SR 5.5 Gal (21 L) Bag 860202449	NO		NO		NO
LinQ 10.6 Gal (40 L) Roll-Top Bag 715008110					
LinQ Gun Case 715010936				NO	
LinQ Fuel Caddy – 4 Gallons 860202246	YES, with LinQ Base Installation Kit **860203055**	NO			
LinQ Oil Caddy – 1 Gallon 860202445					

LinQ ACCESSORIES WITH 36" BASE	5 Front Cargo Rack	6 Rear Cargo Rack	LinQ Can Stack on Top
NEW LinQ Bow and Gun Case 715008232	YES	YES	YES
NEW LinQ Semi-Rigid Bag 715005345			NO
LinQ Cargo Basket (90 L) 715010173			
Front LinQ Cargo Box (90 L) 715005272	YES, remove the Front Cargo Lid for installation using the dropdown	NO	
LinQ Cargo Box (53 L) 715010172	YES	YES	YES
LinQ Low Profile Box (63 L) 715007827			
LinQ Trunk Box (145 L) 715009471	NO	YES, remove the rear rack for installation	
LinQ Trunk Box (87 L) – G3 715009499		YES	NO
LinQ 9.2 Gal (35 L) Cooler 715006998			
LinQ Gun Case 715010936	YES	NO	

G3L LINQ ACCESSORIES

ACCESSORY MOUNTING LOCATIONS AND REQUIREMENTS

LinQ ACCESSORIES WITH 16" BASE	1 Front Cargo Drop Down	2 Front Cargo Lid	3 Rear Cargo	LinQ Can Stack on Top
LinQ Rigid Cooler (18 L) 715010491	YES, with LinQ Base Installation Kit **860203055**	NO	YES, with LinQ Base Installation Kit **860203055**	NO
LinQ Tool Box 715008111		YES, with LinQ Base Installation Kit **860203055**		
NEW LinQ Expandable Bag 4.5 US Gal (17 L) 860202895				
LinQ 5.3 Gal (20 L) Semi-Rigid Cooler 295101252				
LinQ 2.6 Gal (10 L) Modular Cargo Box 715005494				YES
LinQ 5 Gal (20 L) Modular Cargo Box 715007112				
LinQ 7.8 Gal (30 L) Modular Cargo Box 715006830				NO
LinQ Tool Kit 715006829				YES
LinQ SR 5.5 Gal (21 L) Bag 860202449	NO			NO
LinQ 10.6 Gal (40 L) Roll-Top Bag 715008110				
LinQ Gun Case 715010936			NO	
LinQ Fuel Caddy – 4 Gallons 860202246	YES, with LinQ Base Installation Kit **860203055**	NO		
LinQ Oil Caddy – 1 Gallon 860202445				

LinQ ACCESSORIES WITH 36" BASE	4 Front Cargo Rack	5 Rear Rack	LinQ Can Stack on Top
NEW LinQ Bow and Gun Case 715008232	YES	YES	YES
NEW LinQ Semi-Rigid Bag 715005345			NO
LinQ Large Cargo Box 715007001	NO		
LinQ Cargo Basket (90 L) 715005274	YES		
LinQ Cargo Box (53 L) 715006997			YES
LinQ Low Profile Box (63 L) 715007827			
LinQ Cargo Box (90 L) 715005272	YES, remove the Front Cargo Lid for installation using the dropdown	NO	NO
LinQ Trunk Box (87 L) – G3L 715009312	NO	YES	
LinQ Trunk Box (145 L) 715009471		YES, remove the rear rack for installation	YES
LinQ 9.2 Gal (35 L) Cooler 715006998		YES	NO
LinQ Gun Case 715010936	YES	NO	

G3 MAX LINQ ACCESSORIES

ACCESSORY MOUNTING LOCATIONS AND REQUIREMENTS

NOT AVAILABLE

4 NOT AVAILABLE

LinQ ACCESSORIES WITH 16" BASE	1 Front Cargo Drop Down	2 Front Cargo Lid	3 Rear Cargo Drop Down	4 Rear Cargo Lid	LinQ Can Stack on Top
LinQ Rigid Cooler (18 L) 715010491	YES, with LinQ Base Installation Kit **860203055**	NO	NO	NO	NO
LinQ Tool Box 715008111		YES, with LinQ Base Installation Kit **860203055**			
NEW **LinQ Expandable Bag 4.5 US Gal (17 L)** 860202895					
LinQ 5.3 Gal (20 L) Semi-Rigid Cooler 295101252					
LinQ 2.6 Gal (10 L) Modular Cargo Box 715005494					YES
LinQ 5 Gal (20 L) Modular Cargo Box 715007112					
LinQ 7.8 Gal (30 L) Modular Cargo Box 715006830					NO
LinQ Tool Kit 715006829					YES
LinQ SR 5.5 Gal (21 L) Bag 860202449	NO				NO
LinQ 10.6 Gal (40 L) Roll-Top Bag 715008110					
LinQ Gun Case 715010936					
LinQ Fuel Caddy – 4 Gallons 860202246	YES, with LinQ Base Installation Kit **860203055**	NO			
LinQ Oil Caddy – 1 Gallon 860202445					

LinQ ACCESSORIES WITH 36" BASE	5 Front Cargo Rack	6 Rear Rack	LinQ Can Stack on Top
NEW **LinQ Bow and Gun Case** 715008232	YES	YES	YES
NEW **LinQ Semi-Rigid Bag** 715005345			NO
LinQ Cargo Basket (90 L) 715010173			
Front LinQ Cargo Box (90 L) 715005272	YES, remove the Front Cargo Lid for installation using the dropdown	NO	
LinQ Cargo Box (53 L) 715010172	YES	YES	YES
LinQ Low Profile Box (63 L) 715007827			
LinQ Trunk Box (139 L) 715009472	NO	YES, remove the rear rack for installation.	NO
LinQ Trunk Box (87 L) – G3 715009499		YES	
LinQ 9.2 Gal (35 L) Cooler 715006998			
LinQ Gun Case 715010936	YES	NO	

G3L MAX LINQ ACCESSORIES

ACCESSORY MOUNTING LOCATIONS AND REQUIREMENTS

LinQ ACCESSORIES WITH 16" BASE	1 Front Cargo Drop Down	2 Front Cargo Lid	3 Rear Cargo	LinQ Can Stack on Top
LinQ Rigid Cooler (18 L) 715010491	YES, with LinQ Base Installation Kit **860203055**	NO	NO	NO
LinQ Tool Box 715008111		YES, with LinQ Base Installation Kit **860203055**		
LinQ SR 5.5 Gal (21 L) Bag 860202449	NO			
NEW LinQ Expandable Bag 4.5 US Gal (17 L) 860202895	YES, with LinQ Base Installation Kit **860203055**			
LinQ 5.3 Gal (20 L) Semi-Rigid Cooler 295101252				
LinQ 2.6 Gal (10 L) Modular Cargo Box 715005494				YES
LinQ 5 Gal (20 L) Modular Cargo Box 715007112				
LinQ 7.8 Gal (30 L) Modular Cargo Box 715006830				NO
LinQ Tool Kit 715006829				YES
LinQ 10.6 Gal (40 L) Roll-Top Bag 715008110	NO			NO
LinQ Gun Case 715010936				
LinQ Fuel Caddy – 4 Gallons 860202246	YES, with LinQ Base Installation Kit **860203055**	NO		
LinQ Oil Caddy – 1 Gallon 860202445				

LinQ ACCESSORIES WITH 36" BASE	4 Front Cargo Rack	5 Rear Rack	LinQ Can Stack on Top
NEW LinQ Bow and Gun Case 715008232	YES	YES	YES
NEW LinQ Semi-Rigid Bag 715005345			NO
LinQ Large Cargo Box 715007001	NO		
LinQ Cargo Basket (90 L) 715005274	YES		
LinQ Cargo Box (90 L) 715005272	YES, remove the Front Cargo Lid for installation	NO	
LinQ Trunk Box (87 L) – G3L 715009312	NO	YES	
LinQ Cargo Box (53 L) 715006997	YES		YES
LinQ Low Profile Box (63 L) 715007827			
LinQ Trunk Box (139 L) 715009472	NO	YES, remove the rear rack for installation.	NO
LinQ 9.2 Gal (35 L) Cooler 715006998		YES	
LinQ Gun Case 715010936	YES	NO	

6X6 LINQ ACCESSORIES

ACCESSORY MOUNTING LOCATIONS AND REQUIREMENTS

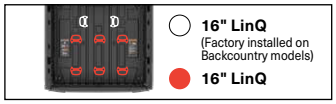

LinQ ACCESSORIES WITH 16" BASE	1 Front Cargo Drop Down*	2 Front Cargo Lid	3 Rear Cargo Bed	LinQ Can Stack on Top
LinQ Rigid Cooler (18 L) 715010491	YES, with LinQ Base Installation Kit **860203055**	NO	YES, with LinQ Sliding Base Installation Kit (**715011784**)	NO
LinQ Tool Box 715008111	NO	YES, with LinQ Base Installation Kit **860203055**		
LinQ SR 5.5 Gal (21 L) Bag 860202449				
NEW LinQ Expandable Bag 4.5 US Gal (17 L) 860202895	YES, with LinQ Base Installation Kit **860203055**			
LinQ 2.6 Gal (10 L) Modular Cargo Box 715005494				YES
LinQ 5 Gal (20 L) Modular Cargo Box 715007112				
LinQ 7.8 Gal (30 L) Modular Cargo Box 715006830				NO
LinQ Tool Kit 715006829				YES
LinQ 10.6 Gal (40 L) Roll-Top Bag 715008110	NO			NO
LinQ Fuel Caddy 5 Gallons 715007822		NO	Yes, with LinQ Sliding Base Installation Kit (**715011784**). Must be installed under the LinQ Cargo Bed Rack (**715009336**).	
LinQ Fuel Caddy – 4 Gallons 860202246	YES, with LinQ Base Installation Kit **860203055**		Yes, with LinQ Sliding Base Installation Kit (**715011784**). (The walls of the bed need to be present.)	
LinQ Oil Caddy – 1 Gallon 860202445				
LinQ Gun Case 715010936	NO	YES, with LinQ Base Installation Kit **860203055**	NO	

LinQ ACCESSORIES WITH 36" BASE	4 Front Cargo Rack	5 Rear Cargo Bed	LinQ Can Stack on Top
NEW LinQ Bow and Gun Case 715008232	YES	Yes, with 2x LinQ Sliding Base Installation Kit (**715011784**). (The walls of the bed need to be removed)	YES
NEW LinQ Semi-Rigid Bag 715005345			NO
LinQ Cargo Basket (90 L) 715005274 or 715010173			
Front LinQ Cargo Box (90 L) 715005272	YES, remove the Front Cargo Lid for installation	NO	
LinQ Cargo Box (53 L) 715006997 or 715010172	YES	Yes, with 2x LinQ Sliding Base Installation Kit (**715011784**). (The walls of the bed need to be removed)	YES
LinQ Low Profile Box (63 L)** 715007827			
LinQ Trunk Box (87 L) 715009499 or 715009312	NO		NO
LinQ 30 US Gal (139 L) Trunk Box 715009472			
LinQ 9.2 Gal (35 L) Cooler 715006998			
LinQ Gun Case 715010936	YES	NO	

**LinQ Low Profile (63 L) (715007827) can be installed in a 16" configuration only at the rear end of the cargo bed or with the LinQ Cargo Bed Rack (715009336).

LinQ ACCESSORIES WITH 16" BASE

LinQ Rigid Cooler (18 L)

G3, G3L

715010491

- Versatile LinQ 16" configuration fits many vehicles.
- Durable rotomolded rigid construction.
- Molded-in handles for quick installation and removal.
- High quality insulation for optimal ice retention.
- Sealed lid for airtight, weather-tight closure.
- Ergonomic and secure latch system offers excellent sealing.
- 4.7 US gal (18 L) capacity.

LinQ 5 US Gal (20 L) Fuel Caddy

G3 (6X6 models only),
G3L (6X6 models only)

715007822

- Quick, easy and secure LinQ system installation.
- Spill-free spout for easy use.
- 5 US gal (20 L) capacity.
- Meets new Flame Mitigation Device (FMD) standard.
- Dimensions: 12" L x 19" W x 12" H.
- Compatible only if installed below the LinQ Cargo Bed Rack (715009336).
- Check local regulations regarding fuel transportation

LinQ Fuel Caddy – 4 Gallons

G3 (except X mr models),
G3L (except X mr models)

860202246

- Quick, easy and secure installation with LinQ system.
- No-spill spout for easy use.
- 3.7 US gallon (14 L) capacity.
- Meets the new latest Flame Mitigation Device (FMD) standard.
- No LinQ 16" accessories can be stacked on the LinQ 4-Gallon Fuel Caddy.
- Can't be installed on the rear lid due to weight limitation.
- See table for installation location and requirements.
- Check local regulations regarding fuel transportation

LinQ Oil Caddy – 1 Gallon

G3 (except X mr models),
G3L (except X mr models)

860202445

- 1 US gallon (3.78 L) capacity.
- No LinQ 16" accessories can be stacked on the LinQ 1-Gallon Oil Caddy.
- Can't be installed on the rear lid due to weight limitation.
- See table for installation location and requirements.

LinQ Chainsaw Holder

G3 (except X mr models),
G3L (except X mr models)

715010187

- This system installs a chainsaw vertically to save space on the rack and serves as a scabbard for storage.
- Clamp the blade for a quick and solid hold.
- Compatible with the majority of chainsaws available on the market as most blades go up to 18".
- Compatible with all 16" LinQ accessories that fit in the front cargo compartment.
- The front compartment features a pre-marked cutout area for easy trimming and installation of the insert, allowing the chainsaw holder to be removed and reinstalled without leaving any visible opening.
- Allows installation of the LinQ Tool Holder.

Not compatible with:
- LinQ Rack Extension when installed on the front rack of the vehicle.

LinQ Modular Box

G3, G3L

715005494 • (10 L)
715007112 • (20 L)
715006830 • (30 L)

- Allows stacking of other modular boxes to always have the right gear accessible.
- Always have the right box size to fit everything.
- Can be installed on any LinQ Base with a 16" width.
- Vehicle limitations must be verified prior to installation.
- See table for installation location and requirements.

Thermal Insert for LinQ Modular Box (10 L)

G3, G3L

219401110

- Insulated liner.
- Fits very well in the LinQ Modular Box (10 L).
- Can contain seven 355 ml cans.
- Keeps ice cold for one day.
- Interior dimensions: 9" L x 17" W x 2½" H.

LinQ Tool Kit

G3, G3L

715006829

- Includes:
  - Cutter pliers
  - Long-nose pliers
  - Locking pliers
  - Ratchet wrench ⅜" drive
  - 6" ratchet extension
  - Integrated CVT belt storage location (belt not included)
  - Long-socket 19 mm ⅜" drive - 6 pts
  - Socket 18 mm ⅜" drive
  - Long-socket 17 mm ⅜" drive - 6 pts
  - Socket 15 mm ⅜" drive
  - Socket 13 mm ⅜" drive
  - Socket 10 mm ⅜" drive
  - Socket 8 mm ⅜" drive
  - Socket Torx T40 ⅜" drive
  - Socket Torx T30 ⅜" drive
  - Socket Torx T20 ⅜" drive
  - Breaker bar ⅜" drive
- Combination Wrench set:
  - Wrench 19 mm
  - Wrench 18 mm
  - Wrench 15 mm
  - Wrench 13 mm
  - Wrench 10 mm
  - Wrench 8 mm
- See table for installation location and requirements.

LinQ Tool Box

G3, G3L

715008111

- High precision injected HDPE construction provides rigidity and durability.
- 5 gal (19 L) maximum capacity.
- Weather-resistant, sealed and lockable cover.
- Easy one-second on/off tool-less system. All the benefits of LinQ – simple, fast and secure.
- See table for installation location and requirements.

LinQ 10.6 Gal (40 L) Roll-Top Bag

G3, G3L

715008110

- Fully waterproof roll-top dry bag will securely store and confine your equipment.
- LinQ mounted using heavy-duty rigid plastic base.
- High capacity storage solution 10.6 gal (40 L).
- Bottom foam liner for additional equipment protection.
- Integrated handle for easy transportation on/off the vehicle.
- Marinized for salt water purposes.
- Dimensions: 14" L x 19" W x adjustable H.
- See table for installation location and requirements.

SR 5.5 Gal (21 L) LinQ Bag

G3, G3L

860202449

- Semi-rigid expandable bag.
- 5.5 gal (21 L) capacity.
- See table for installation location and requirements.

NEW LinQ Expandable Bag 4.5 US Gal (17 L)

G3, G3L

860202895

- Semi-rigid expandable 8.5 L to 17 L (2.2 to 4.5 US gallon) LinQ bag.
- Compression style bag allows secure storage of belongings.
- Premium look pairs well with the vehicle.
- Quick, easy and secure LinQ system installation.
- Attaches with one set of LinQ fasteners.
- Featuring inside mesh pocket to separate smaller items.

LinQ 5.3 US Gal (20 L) Semi-Rigid Cooler

G3, G3L

295101252

- 5.3 US gal (20 L) of insulated, water-resistant capacity.
- Quick, easy and secure LinQ system installation.
- Attaches with one set of LinQ Fasteners.
- Single day use soft cooler.
- Mesh pocket on top of the lid.
- Zippered pocket under the lid for quick and easy access.
- Removable interior for easy cleaning.
- Carry handles for easy transport.
- Can contain twelve 355 ml cans.
- Dimensions: 19" L x 13" W x 10" H.
- See table for installation location and requirements.

LinQ ACCESSORIES WITH 36" BASE

NEW LinQ Rear Cargo Box 133 L

G3 (except X mr models),
G3L (except X mr models)

715011127

- Large rear storage compartment accommodates up to two helmets or other bulky gear.
- Weatherproof polyethylene rear cargo box. Can be installed on the rear rack only.
- Lockable with a lock on the front of the box (2 keys included).
- Discrete drop-down compartment at the bottom of the box to keep your essentials organized, perfect for small tools, microfiber cloths or a first-aid kit.
- Ability to install LinQ Tool Holders (715008896) on the box.
- One LinQ Lite Multi Holders (715008087) can be installed to add LinQ Lite accessories to your cargo box.

NEW LinQ Semi-Rigid Bag

G3, G3L

715005345 • Black

- Offers 70 L (18.5 gal) of cargo space for fully loaded adventures.
- Semi-rigid construction.
- Removable lid that converts the bag into a practical storage basket.
- Dedicated seal ensures excellent dust and weather resistance.
- Three-section lid design for quick and convenient access.
- Integrated removable center compartment to keep your items neatly organized.

Required for installation:
- Stopper Kit (715008895) for 6x6 models only.

Not compatible with:
- LinQ Chainsaw Holder (715004975).

NEW LinQ Bow & Gun Case

G3, G3L

715008232

- Made of impact-resistant injected polypropylene and weatherproof.
- LinQ-mounted for efficient and secure storage.
- Practical design allows you to store a bow and arrows or firearms up to 40" (1 m).
- Arrow rubber racking system securely fixes shafts in place under lid.
- Fits up to 9 arrows from 6 mm to 9 mm.
- Two convoluted foam pieces and one foam sheet are included, so you can make the necessary adjustments according to your use.
- Mounting tabs attach to the base, and a 6' Velcro strap is included to let you firmly position your gear exactly the way you want.
- Easily carried with the rigid handle.
- Anti-vibration system prevents the handle from moving while riding.
- Support feet at hinge level so the box can stand on its own.
- Compact design allows for maximum rear field of vision.
- Features a lock on the front of the box (two keys included).
- Can be installed in several 16" configurations (SXS), or in a 36" configuration (ATV & SXS).
- LinQ 16" accessories can be installed on the cover to increase cargo capacity.
- See table for installation location and requirements.
- Check local regulations regarding firearms transportation.

LinQ Trunk Box (145 L)

G3 (except MAX & 6X6 models),
G3L (except MAX & 6X6 models)

715009471

- Polyethylene Trunk Box replacing the rear rack for perfect integration and to increase cargo capacity.
- Storage capacity of 31 gal (145 L).
- Easy to install and remove with the LinQ system.
- LinQ anchors must be installed in the rear cargo compartment (4 LinQ anchors included).
- Possibility to install LinQ 16" accessories on the cover to increase the cargo capacity.
- New ergonomic and resistant latch system offers excellent sealing.
- Ability to install LinQ Tool Holders (715008896) on the box.
- Lockable with a lock on the front of the box (two keys included).
- See table for installation location and requirements.

Rear Cargo Box Divider (145 L)

G3 (except MAX & 6X6 models)
G3L (except MAX & 6X6 models)

715010103

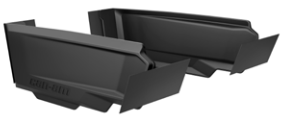

- Easy installation thanks to hook-and-loop fasteners.
- Includes left and right divider.
- Mesures 7" (176 mm).
- It is installed at a specific point in the cargo box to divide it neatly into 3 similar sections.

Required for installation:
- LinQ 31 US Gal (145 L) Trunk Box (715009471).

LinQ Trunk Box (139 L)

G3 (MAX models only),
G3L (MAX models only)

715009472

- Polyethylene Trunk Box replacing the rear rack for perfect integration and to increase cargo capacity.
- Storage capacity of 30 gal (139 L).
- Easy to install and remove with the LinQ system.
- LinQ anchors must be installed in the rear cargo compartment (4 LinQ anchors included).
- Compatible with the passenger seat.
- New ergonomic and resistant latch system offers excellent sealing.
- Ability to install LinQ Tool Holders (715008896) on the box.
- Lockable with a lock on the front of the box (two keys included).
- See table for installation location and requirements.

Rear Cargo Box Divider (139 L)

G3 (MAX models only),
G3L (MAX models only)

715010111

- Easy installation thanks to hook-and-loop fasteners.
- Includes left and right divider.
- Mesures 9.5" (248 mm).
- It is installed at a specific point in the cargo box to divide it neatly into 3 similar sections.

Required for installation:
- LinQ 30 US Gal (139 L) Trunk Box (715009472).

LinQ Trunk Box (87 L) – G3L

G3L | **715009312**

- Weatherproof polyethylene rear cargo box.
- Can be installed on the rear rack only.
- Storage capacity of 23 gal (87 L).
- Optimized shape of the cargo box base fits the G3L rear rack perfectly.
- Lockable with a lock on the front of the box (2 keys included).
- Easy to install, easy to remove using the LinQ system.
- Installation in LinQ 36" configuration.
- Compatible with the passenger seat.
- Ability to install LinQ Tool Holders (715008896) on the box.
- Up to 3 LinQ Lite Multi Holders (715008087) can be installed to add LinQ Lite accessories to your cargo box.
- See table for installation location and requirements.

LinQ Trunk Box (87 L) – G3

G3 | **715009499**

- Weatherproof polyethylene rear cargo box.
- Can be installed on the rear rack only.
- Storage capacity of 23 gal (87 L).
- Optimized shape of the cargo box base to fit the G3L rear rack perfectly.
- Lockable with a lock on the front of the box (2 keys included).
- Easy to install, easy to remove using the LinQ system.
- Installation in LinQ 36" configuration.
- Compatible with the passenger seat.
- Ability to install Tool Holders (715008896) on the box.
- Up to 3 LinQ Lite Multi Holders (715008087) can be installed to add LinQ Lite accessories to your cargo box.
- See table for installation location and requirements.

LinQ Cargo Box (90 L)

G3 (except X mr models), G3L (except X mr models) | **715005272**

- Made of polyethylene.
- Storage capacity of 23 gal (90 L).
- Can be installed on the front rack only.
- Easy to install, easy to remove using the LinQ system.
- Need to remove the front DropDown cover for optimal capacity.
- Lockable with a lock on the front of the box (2 keys included).
- See table for installation location and requirements.

LinQ Cargo Box (53 L)

G3 | **715010172**
G3L | **715006997**

- Made of polyethylene.
- Storage capacity of 14 gal (53 L).
- Easy to install and remove with the LinQ system.
- Can be installed on the front or rear racks.
- New ergonomic and resistant latch system offers excellent sealing.
- Possibility to install LinQ 16" accessories on the cover and increase the cargo capacity.
- Ability to install LinQ Tool Holders (715008896) on the box.
- Lockable with a lock on the front of the box (two keys included).
- See table for installation location and requirements.

LinQ Low Profile Box (63 L)

G3, G3L | **715007827**

- Made of impact-resistant injected polypropylene and weatherproof, this box has a storage capacity of 16.6 gal (63 L).
- LinQ-mounted for efficient and secure storage, it is locked in place with only a quarter turn. Easy to install, easy to remove using the LinQ system.
- Can be installed in a 36" configuration only.
- LinQ 16" accessories can be installed on the cover to increase cargo capacity.
- Easily carried with the rigid handle. The anti-vibration system prevents the handle from moving while riding.
- Support feet at hinge level so the box can stand on its own.
- The compact design allows for maximum rear field of vision.
- Features a lock on the front of the box (two keys included).
- See table for installation location and requirements.

LinQ Cargo Basket (90 L)

G3 | **715010173**
G3L | **715005274**

- Made of polyethylene.
- Storage capacity of 23 gal (90 L).
- Easy to install and remove with the LinQ system.
- Can be installed on the front or rear racks.
- Six handles on the contour to easily install bungee cords.
- Ability to install LinQ Tool Holders (715008896) on the basket.
- See table for installation location and requirements.

Large Cargo Box*

G3L | **715007001**

- Rear bed to carry large items.
- Anchor points (D-ring), LinQ fixtures for tool holder and marks to allow the installation of a 16" accessory.
- Also has a mat for the floor and slot to enable the installation of a divider and a slot for a divider to close the recess on the rear vertical lip.
- It is installed on ATV platforms through the LinQ system and hooks for easy installation and removal.

** Installation of some accessories shown may impact vehicle compliance with some regulations. Consult your local dealer for information.*

LinQ 9.2 Gal (35 L) Cooler

G3, G3L

715006998

- LinQ-mounted for efficient and secure storage, locked in place with only a quarter turn.
- Easy to install, easy to remove using the LinQ system.
- Installation in LinQ 36" configuration.
- Made of polyethylene for exceptional rigidity and durability.
- Storage capacity of 9.2 gal (35 L).
- Lock the cooler on the vehicle using the LinQ Lock (860201968).
- Premium-quality foam insulation for optimal ice retention.
- Molded-in handles for quick installation and removal.
- Option to add LinQ Lite Multi Holder (5 LinQ Lite) (715008087) on the side and at the rear of the cooler.
- A dry basket is included to protect your food from water.
- Drain plug at the bottom to get rid of excess water.
- The new ergonomic and resistant latch system ensures the top is tightly sealed.
- Innovative way to hold 12 cans (355 ml).
- Cannot be installed on the front rack.
- See table for installation location and requirements.

LinQ LITE ACCESSORIES

LinQ Lite Multi Holder (Front Fenders)

G3, G3L

715009474

- Allows for installation of select LinQ Lite accessories on the front fenders.
- Three LinQ Lite mounting points allow for versatile storage/hanging options.
- Holds up to two LinQ Lite Cupholders (715009406) or a single LinQ Lite Fender Bag (715009280).
- Finished, robust style.
- Includes necessary installation hardware.
- Sold as a pair.

LinQ Lite Multi Holder

G3 (6x6 models only, except MAX models)
G3L (6x6 models only, except MAX models)

295100977

- Allows for installation of select LinQ Lite accessories.
- Capable of mounting on any flat surface such as garage walls for easy accessory storage.
- Five LinQ Lite mounting points allow for versatile storage/hanging options.
- Finished, robust style.
- Includes necessary installation hardware.
- Required to install LinQ Lite Bag (10 L) (715009132).

LinQ Lite Fender Bag

G3, G3L

715009280

- Provides 1.1 gal (5 L) of extra storage space for tools, accessories or personal items.
- Constructed using high-durability materials designed for enhanced resistance to variable weather conditions.
- Designed to fit on the Outlander fender, it attaches securely with the LinQ Lite Rail.
- Features a zippered pocket and magnetic lid for secure closure.
- Includes an interior mesh pocket, perfect for organizing your essentials.
- Front mesh pocket provides convenient access to frequently used items.

Required for installation:
- LinQ Lite Multi Holder (715009474).

LinQ Lite Bag (10 L)

G3, G3L

715009132

- Provides 2.2 gal (10 L) of extra storage space for tools, accessories or personal items.
- Constructed using high-durability materials for enhanced resistance to variable weather conditions.
- Shoulder strap included for easy transport.
- Features a zippered pocket and magnetic lid for secure closure.
- The yellow interior helps you find what you're looking for in seconds.
- Includes an interior mesh pocket, perfect for organizing your essentials.
- Side mesh pocket on each side provides convenient access to frequently used items.
- You can install it on several of our LinQ Cargo Boxes with the LinQ Lite Multi Holder (715008087).
- It can fit on the LinQ Trunk Box (87 L) (715009312 or 715009499) or on the LinQ 9.2 Gal (35 L) Cooler (715006998) or the Large Cargo Box (715007001).

Required for installation:
- LinQ Lite Multi Holder (715008087) or the LinQ Lite Multi Holder (295100977) if installed on the 6X6 bed wall (except G3L 6X6 MAX).

LinQ Lite Cup Holder

G3, G3L

715009406

- Keep your beverage within reach.
- Flexible fins adjust to various beverage container sizes to hold most securely.
- No permanent installation point means you're free to move it almost anywhere.
- Tool-less placement, easy to move from place to place.

Required for installation:
- LinQ Lite Multi Holder (715008087) for installation on cargo box or (715009474) for installation on fender.

LinQ Lite Multi Holder (5 LinQ Lite)

G3, G3L

715008087

- Allows for installation of select LinQ Lite accessories.
- Five LinQ Lite mounting points allow for versatile storage/hanging options.
- Finished, robust style.
- Includes necessary installation hardware.
- You can install it on several of our LinQ Cargo Boxes and have as many as three on one box.
- It can fit on the LinQ Trunk Box (87 L) (715009312 or 715009499) or on the LinQ 9.2 Gal (35 L) Cooler (715006998) or the Large Cargo Box (715007001).
- Holds up to three LinQ Lite Cup Holders (715009406).

LinQ Lite Multipurpose Bag

G3, G3L

295101154

- Perfect add-on to store and organize your equipment or store other items like sunscreen, cellphone, sunglasses and more.
- Tool-less installation in seconds with LinQ Lite clip-in system.
- Five external pockets for fast access to small necessities.
- Features one zippered opening.
- Dimensions: 16" L x 3.5" W x 10.5" H.

Required for installation:
- LinQ Lite Multi Holder (715008087).

LinQ Lite Action Camera Holder

G3, G3L

295101139

- LinQ Lite attachment system for cameras.
- Provides great vantage points to capture photos and videos.
- Offer 360-angle positioning for perfect filming and taking photos.
- Designed to hold devices securely.
- Fast, easy attachment and removal.

Required for installation:
- Outlander: Requires LinQ Lite Multi Holder (715008087) or LinQ Lite Multi Holder (Front Fenders) (715009474) for installation. The Mutli Holder (715008087) can be installed on the following accessories: LinQ 23 US Gal (87 L) Trunk Box – G3L (715009312), LinQ 23 US Gal (87 L) Trunk Box – G3 (715009499), LinQ 9.2 US Gal (35 L) Cooler (715006998), LinQ Large Cargo Box (715007001).
- Outlander 6x6: Requires LinQ Lite Multi Holder (295100977 or 715008087).

LinQ RACKS & HOLDERS

LinQ Cargo Bed Rack

G3 (6x6 models only),
G3L (6x6 models only)

715009336

- Strong, durable steel rack.
- Easy and tool-less installation thanks to the LinQ System.
- Allows the installation of 16" LinQ accessories with LinQ Sliding Base Kit included.
- 36" LinQ anchors integrated into the rack.
- Can be positioned in the front, middle or rear of the cargo bed.
- Up to 2 racks can be installed at the same time (front and rear position).
- Allows multi-level storage on cargo bed.
- Provides more usable space in the cargo box.
- The clearance under the rack is 11.5" (294 mm).
- 4 Tool Holder Bolt-On (715008896) can be installed on each side for a total of 8.
- Required to install the LinQ Fuel Caddy 5 US Gal (20 L) (715007822). The Fuel Caddy must be installed below the LinQ Cargo Bed Rack.

X mr Rear Rack

G3 (except MAX & 6x6 models)

715010217

- Black polypropylene glass-filled rear rack replacing the actual rack.
- LinQ 36" anchors integrated.
- Possibility to install LinQ 16" accessories into the dropdown to increase the cargo capacity (requires LinQ Base Installation Kit).
- The rack features six handles crafted with precision.

LinQ Rack Extension

G3L

715010186

- Easy to install and remove with the LinQ system.
- Die-cast toe-in with a rugged rubber cover secures the extension to the front or rear vehicle rack.
- Fits front or rear of the vehicle.
- Provides tie-down points to secure cargo on racks.
- Made of steel with anti-corrosion coating and durable powder-coat finish.
- Height of 7".

LinQ Front Rack Extension

G3 (except X mr models)

715009281

- Easy to install and remove with the LinQ system.
- Fits front of the vehicle only.
- Provides tie-down points to secure cargo on racks.
- Made of aluminum with durable powder-coat finish.
- Height of 5".

LinQ Rear Rack Extension

G3 (except X mr & 6X6 models) | **715009475**

- Easy to install and remove with the LinQ system.
- Fits rear of the vehicle only.
- Provides tie-down points to secure cargo on racks.
- Made of aluminum with durable powder-coat finish.
- Height of 7".

LinQ Tool Holder

G3, G3L | **715007358**

- Ultra-versatile tool holder.
- Convenient swivel-latch allows tools to be stored in any orientation.
- Sold in pairs.

LinQ Gear Grips

G3, G3L | **715005340**

- Durable and flexible grips provide a custom fit for a variety of items from 1" to 4" (2.5 cm to 10 cm) in diameter.
- Heavy-duty design for carrying bows, fishing poles, rakes, farm tools and more.
- Quick-release button opens grip quickly for easy access to gear.
- Heavy-duty base system built for the toughest adventures.
- Make transporting your tools a snap by combining the Gear Grips with the LinQ system.
- 360° orientation.
- Sold in pairs.

Gear Grips

G3L | **715001421**

- Durable, flexible grips cushion and protect while providing a custom fit for a variety of items from 1" to 4" (2.5 cm to 10 cm) in diameter.
- Heavy-duty design for carrying bows, fishing poles, rakes, farm tools and more.
- Quick-release button opens grip quickly for easy access to gear.
- Heavy-duty base system built for the toughest adventures.
- Easy installation on tubular racks, extension racks, brackets or bumpers.
- Sold in pairs.

LinQ Gun Case

G3, G3L | **715010936**

- Weatherproof sealed Gun Case.
- The practical design lets riders store shotguns and rifles up to 50" (127 cm), even with most optic configurations.
- Adapts to different weapon shapes and features with foam cushions that can be repositioned.
- Includes a soft liner with a bright yellow inner lining for high visibility with a front end reinforced for increased durability and a top handle for easy carrying and transport.
- Liner stays securely in place with a rear loop that attaches inside the case, ideal for angled use.
- Adjustable strap matches the rifle length to optimize liner fit and maintain proper positioning.
- The Gun Case is LinQ-mounted for efficient and secure storage, and is locked in place with only a quarter turn.

Required for installation:
- Can't be installed on the rear lid due to weight limitation.
- G3L: Must be installed on the front compartment lid using the LinQ Base Installation Kit (860201806) or on fender position using the LinQ Gun Case Mounting Kit (715006074).

NEW Bag for LinQ Gun Case

G3, G3L | **715010189**

- Durable, weather-resistant exterior.
- Fits rifles up to 50" (127 cm) in length.
- Top handle for easy carrying and transport.
- Bright yellow inner lining for high visibility.
- Front end reinforced for increased durability.
- Features a rear loop for attaching the bag inside the LinQ Gun Case (715009240).
- Adjustable strap matches the rifle length to optimize liner fit and maintain proper positioning.
- Compatible with previous LinQ Gun Case (715009240) with required Hardware Kit (715011740).

LinQ Gun Case Mounting Kit – Fender Position

G3, G3L | **715006074**

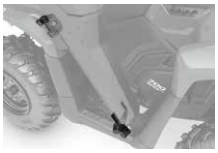

- This kit is required to install the LinQ Gun Case on the fender position.
- Installs on the right side of the vehicle, and the safety system allows the driver or passenger to quickly exit the vehicle.
- The low-profile mounting system can be left on the vehicle year-round and doesn't get in the way when the Gun Case is not installed.

LinQ MOUNTING

NEW LinQ Sliding Base

G3 (6x6 models only), G3L (6x6 models only) | **715011726**

- LinQ Sliding Base only.
- The LinQ Sliding Base is non-permanent, easy to remove and allows you to play with and swap anchors.
- To be used with the LinQ Sliding Mount Plate.
- Sold as a pair.

LinQ Sliding Base Installation Kit

G3 (6x6 models only)
G3L (6x6 models only)

715009123

- This LinQ Sliding Base Installation Kit comes in 2 parts.
- The first part, the LinQ Sliding Mount Plate, can stay on your vehicle at all times without interfering with loading, thanks to its flat design.
- When you need the second part, the LinQ Sliding Base, you can simply clip it in in less than 2 seconds.
- The LinQ Sliding Base is therefore non-permanent, easy to remove and you can easily play with and swap anchors.
- Includes LinQ Sliding Mount Plate, LinQ Sliding Base, and hardware.

LinQ Base Installation Kit

G3, G3L | **860203055**

- Unique mounting fastener usable on any LinQ system accessory.
- Included: 2 cargo LinQ bases and hardware.

LinQ Base

G3L | **715002350**

- Made of polypropylene glass fiber.
- Allows you to install LinQ accessories.
- Sold in pack of 4.

LinQ Replacement Parts

715010798

- Unique mounting fastener usable on any LinQ system accessory.
- Tool-less installation and removal.
- Sold in pairs.

LinQ Lock

G3, G3L | **860201968**

- Simple way to securely lock most LinQ accessories.
- Lock cover protects lock from the elements.
- Corrosion resistant.
- Pack of 1, includes 2 keys.

Not compatible with:
- LinQ 4.2 US Gal (16 L) Cooler, LinQ Tool Box, LinQ Tool Holder, LinQ Gear Grips, LinQ Gun Case (715010936) or LinQ Cargo Bed Rack (715009336).

CARGO & STORAGE

NEW Utility Box 6.6 gal (25 L)	G3 (6x6 models only), G3L (6x6 models only)	**715009772**

- Wherever you go and whatever you do, this handy 6.6 Gal (25 L) utility box is your mobile storage.
- Located under the flatbed, the lid keeps your equipment safe from the elements in all conditions.

Soft Storage Bag (70 L)	G3L	**715007002**

- Carry your gear in a weatherproof bag.
- Soft bag with a storage capacity of 18.5 gal (70 L) designed to maximize space in the front or rear of the vehicle.
- 3-compartment bag with removable dividers.
- Easy to install with strap system.
- X mr models: Fits on rear rack only.

HOLDERS

Tie-Down Anchors	G3 (6x6 models only), G3L (6x6 models only)	**715010487**

- Made of high-strength cast aluminum.
- Coated with corrosion resistant black coating.
- Add extra points on the wall of the cargo bed for tying down cargo in the back of your vehicle.
- Includes 4 pieces.

Tool Holder Bolt-On	G3, G3L	**715008896**

- Tool Holder is made to fit the LinQ Cargo Basket (90 L) (715005274 & 715010173), LinQ Cargo Box (53 L) (715006997 & 715010172), LinQ Trunk Box (139 L) (715006097 & 715009472), LinQ Cargo Bed Rack (715009336), and LinQ Trunk Box (145 L) (715005273 & 715009471).
- Convenient swivel-latch allows tools of all shapes to be stored in the proper orientation.
- Sold in pairs.
- Several degrees of adjustment.

Multi-Fit Holder	G3L	**715002354** · Single **715001945** · Double

- Open U-shaped bracket for carrying tools (shovel, axe) and hunting weapons (rifle, bow) that are safely secured, but easily accessible.
- Easy installation on tubular rack, extension racks, basket or bumpers.
- Sold in pairs.

WINDSHIELDS

Adventure Side Wind Deflectors	G3L (except X mr and Electric models)	**715005862**

- Side Wind Deflectors for additional wind protection.
- Easy installation.
- Works with Adventure Windshields (715005860, 715005377, 715007268).
- T Category Approved

Required for installation:
- Console Extension (715005368).

Not compatible with:
- Integrated Audio System (715005354).

Adventure High Windshield – Hardcoated *

G3L (except X mr and Electric models) | **715007268**

- Adventure windshield with three-position adjustable height.
- 14" (36 cm) high to protect against wind and winter weather.
- Made of injected polycarbonate with a thickness of 5⁄32" (4 mm) with ultra-resistant Quantum† coating.
- Provides excellent optical clarity and better abrasion resistance.
- Side Wind Deflectors (715005862) available for added protection.

Required for installation:
- Console Extension (715005368).

Adventure High Windshield *

G3L (except X mr and Electric models) | **715005377**

- Adventure windshield with three-position adjustable height.
- 14" (36 cm) high to protect against wind and weather.
- Made of injected polycarbonate with a thickness of 5⁄32" (4 mm).
- Side Wind Deflectors (715005862) available for added protection.

Required for installation:
- Console Extension (715005368).

Adventure Low Windshield *

G3L (except X mr and Electric models) | **715005860**

- Adventure windshield with three-position adjustable height.
- 10 in. (25 cm) high for wind protection.
- Made of injected polycarbonate with a thickness of 5⁄32" (4 mm).
- Side Wind Deflectors (715005862) available for added protection.

Required for installation:
- Console Extension (715005368).

Console Extension

G3 (except X mr models) | **715009218**

- Integrated storage compartment (0.44 gal / 2 L) with magnetic mount safe for your electronic device.
- Robust injected fiber-reinforced-polypropylene construction makes it easy to fit and install.
- 25 times stronger than any smartphone's weight, so you can ride through rough terrain confidently.
- Two possible positions for your electronic device: portrait and landscape.
- Includes everything needed for installation on your favorite electronic devices: one pre-assembled Can-Am plate with 3M multi-surface adhesive.
- Includes guide clips molded into the door to feed the charging cable.
- Possibility of installing USB outlet in storage compartment (USB power outlet sold separately).
- Required for the installation of the Adventure Windshield and Side Wind Deflectors.
- Includes tether cord for additional peace of mind.
- T Category Approved

Not compatible with:
- Snorkel Kit.

Adventure Side Wind Deflectors

G3 (except X mr models) | **715009462**

- Side Wind Deflectors for additional wind protection.
- Easy installation.
- Controllable vents to manage airflow.
- Works with Adventure Windshields (715009219, 715009453, 715009458).
- T Category Approved

Required for installation:
- Console Extension (715009218).

Not compatible with:
- Integrated Audio System (715005354).

Adventure High Windshield – Hardcoated *

G3 (except X mr models) | **715009458**

- Quickly change your wind protection with the flip of both levers.
- 14" (36 cm) high to protect against wind and winter weather with a 2" (5 cm) adjustment.
- Made of injected polycarbonate with a thickness of 5⁄32" (4 mm) with ultra-resistant Quantum† coating.
- Provides excellent optical clarity and better abrasion resistance.
- Side Wind Deflectors (715009462) available for added protection.

Required for installation:
- Console Extension (715009218).

Adventure High Windshield *

G3 (except X mr models) | **715009453**

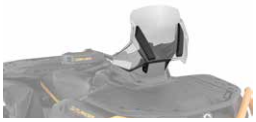

- Quickly change your wind protection with the flip of both levers.
- 14" (36 cm) high to protect against wind and weather with a 2" (5 cm) adjustment.
- Made of injected polycarbonate with a thickness of 5⁄32" (4 mm).
- Side Wind Deflectors (715009462) available for added protection.

Required for installation:
- Console Extension (715009218).

* *Installation of some accessories shown may impact vehicle compliance with some regulations. Consult your local dealer for information.*

Adjustable Adventure Low Windshield *

G3 (except X mr models)	**715009219**

- Quickly change your wind protection with the flip of both levers.
- 10" (25 cm) high for wind protection with a 2" adjustment.
- Made of injected polycarbonate with a thickness of 5⁄32" (4 mm).
- Side Wind Deflectors (715009462) available for added protection.

Required for installation:
- Console Extension (715009218).

High Windshield Kit *

G3 (except X mr, Backcountry and XT-P), G3L (except X mr models)	**715006480**
G3 (Backcountry & XT-P models only)	**715010902**

- 11" (28 cm) high, for wind protection and winter applications.
- The windshield is made of polycarbonate, 1⁄8" thick (3 mm).
- Integrated plastic injected handguard with Can-Am logo.

Required for installation:
- Handguards Frame Kit (715010295) for installation on units with no factory handguards.

Not compatible with:
- Integrated Audio System (715005354) or Console Extension (715009218 or 715005368).

Extra High Windshield Kit *

G3 (except X mr, Backcountry and XT-P), G3L (except X mr models)	**715006481**
G3 (Backcountry & XT-P models only)	**715010947**

- 16" (41 cm) high, for wind protection and winter applications.
- The windshield is made of polycarbonate, 1⁄8" thick (3 mm).
- Integrated plastic injected handguard with Can-Am logo.

Required for installation:
- Handguards Frame Kit (715010295) for installation on units with no factory handguards.

Not compatible with:
- Integrated Audio System (715005354) or Console Extension (715009218 or 715005368).

Console Extension

G3L (except X mr and Electric models)	**715005368**

- Integrated storage compartment (1 gal/4 L) with magnetic mount safe for your electronic device.
- Robust injected fiber-reinforced-polypropylene construction makes it easy to fit and install.
- Magnetic mount is 25 times stronger than any smartphone's weight, so you can ride through rough terrain confidently.
- Two possible positions for your electronic device: portrait and landscape.
- Includes everything needed for installation on your favorite electronic devices: two pre-assembled Can-Am plates with 3M multi-surface adhesive.
- Includes guide clips molded into the door to feed the charging cable.
- Possibility of installing USB outlet in storage compartment (USB power outlet sold separately).
- Required for the installation of the Adventure Windshield and Side Wind Deflectors.
- Includes tether cord for additional peace of mind.
- T Category Approved
- **Not compatible with:**
- Snorkel Kit.

Console Extension USB Power Outlet

G3 (except X mr & Electric models), G3L (except X mr & Electric models)	**715008750**

- Useful for the Console Extension (715005368 & 715009218) to plug your electronic device charger into the compartment.
- USB-A and USB-C ports.
- Rubber cap protects ports when not in use.
- Backlit to highlight the USB ports.

Required for installation:
- Console Extension (715005368 or 715009218).

HANDLEBARS & MIRRORS

Handguards Frame Kit

G3 (except X mr 1000R models), G3L	**715010295**

- Lightweight black die-cast aluminum full wrap frame.
- Mounting system leaves the handlebar free.
- Includes complete hardware.
- Required to install High & Extra High Windshield Kit (715006480, 715006481, 715010902 & 715010947) for units with no factory handguards.
- T Category Approved

Required for installation:
- Touring Handguards (715010293/715010294) or XT Handguards (715010296) or Sport Handguards (715010297/715011154).

* *Installation of some accessories shown may impact vehicle compliance with some regulations. Consult your local dealer for information.*

Touring Handguards

G3 (except X mr 1000R models), G3L

■ **715010293** • Black
■ **715010294** • Neo Yellow

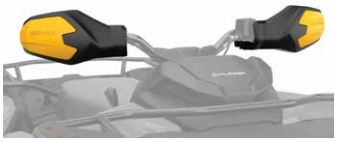

- Protect against wind, branches and debris.
- Rugged injected plastic deflectors with Can-Am logo.
- New ergonomic design offers better comfort for the hand and increases protection.
- Include complete hardware.
- T Category Approved

Required for installation:
- Handguards Frame Kit (715010295).

XT Handguards

G3 (except X mr 1000R models), G3L

715010296

- Protect against wind, branches and debris.
- Rugged injected plastic deflectors with Can-Am logo.
- New ergonomic design offers better comfort for the hand and increases protection.
- Include complete hardware.
- T Category Approved

Required for installation:
- Handguards Frame Kit (715010295).

Sport Handguards

G3 (except X mr 1000R models), G3L

■ **715011154** • Black **NEW**
■ **715010297** • Orange Crush

- Give your ATV a sporty look with the low-profile design.
- Rugged injected plastic deflectors with Can-Am logo.
- Include complete hardware.
- T Category Approved

Required for installation:
- Handguards Frame Kit (715010295).

Handlebar Muffs

G3 (except X mr 1000R models), G3L

715009288

- Ultra warm muffs for extreme cold conditions.
- Thermoformed construction allows muffs to keep their shape and provides more space for hand movement.
- Easy to install and remove without any tools.
- Large transparent section allows visibility of control switches.
- Installing the muffs without the handguard's large plastic parts can cause interference with controls.

Required for installation:
- Full Wrap Handguards Frame Kit (715010295) with Touring Handguards (715010293 or 715010294) or XT Handguards (715010296).

Not compatible with:
- Sport handguards (715010297/715011154).
- Windshield Kits (715006481, 715006480, 715010902 & 715010947).

Note: Always install complete Can-Am Touring or XT Handguards with these Handlebar Muffs.

Driver Full Wrap Handguards

G3 (base & DPS models only),
G3L (base & DPS models only)

■ **715005362** • Neo Yellow

- Protect against wind, branches and debris.
- Rugged injected plastic deflectors with Can-Am logo.
- Lightweight black die cast aluminum full wrap frame.
- New ergonomic design offers better comfort for the hand and increases protection.
- Mounting system leaves the handlebar free.
- Include complete hardware.
- T Category Approved.

Passenger Wind Deflectors

G3 (MAX models only)
G3L (MAX models only)

715001669

- These wind deflectors fit on the passenger handles and provide greater comfort while riding.
- Easy to install and remove.

Handlebar Mirrors

G3, G3L

715005366

- Adjustable handlebar mounted convex mirrors.
- The convex surface allows improved visibility with a wider field of view.
- Don't require a windshield or fairing to be mounted.
- Work with all windshield options.

SKID PLATES

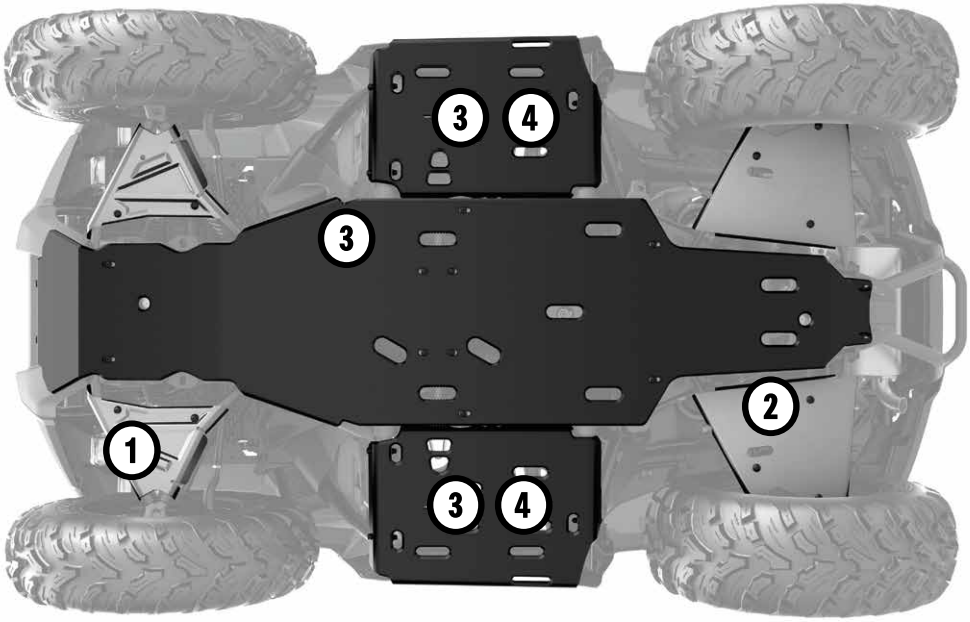

Our Skid Plates deliver the durability, strength and reliability your adventures need. Protect the underbelly of your vehicle from front to rear, with folded ends at the footwells for a little extra. They combine materials for peak protection: With aluminum A-arms and a plastic underbelly, your ride can drive across rough terrain confidently.

- Quick and easy, bolt-on installation. No need to remove factory skid plates. No more rivets or rivnuts.
- Thicker underbelly plates (10 mm).

OUTLANDER

	G3		G3L		ELECTRIC	
	Except MAX models	MAX models only	Except MAX models	MAX models only	Except MAX models	MAX models only
SKID PLATE PROTECTION KIT (T Category Approved)						
	715009216 (except X mr & Backcountry models)	**715009217** (except X mr & Backcountry models)	**715010280**	**715010281**		
INDIVIDUAL SKID PLATES (T Category Approved)						
(1) **Front Aluminum A-Arm Protectors**	**715009214** (except X mr & Backcountry models)	**715009214** (except X mr & Backcountry models)	**715005305**	**715005305**	**715005305**	**715005305**
NEW Front Plastic A-Arm Protectors *(Not illustrated - Not included in the Skid Plates Protection Kits)*	**715010046**	**715010046**	**715010046**	**715010046**	**715010046**	**715010046**
(2) **Rear Aluminum A-Arm Protectors** *(Sold in pairs)*	**715009215** (except X mr & Backcountry models)	**715009215** (except X mr & Backcountry models)	**715005308**	**715005308**	**715005308**	**715005308**
NEW Rear Plastic A-Arm Protectors *(Not illustrated - Not included in the Skid Plates Protection Kits)*	**715010155**	**715010155**	**715010292**	**715010292**	**715010292**	**715010292**
(3) **HMWPE Underbelly and Footboard Plates**	**715009864**	**715009865**	**715009864**	**715009865**		
(4) **NEW Footwell Plastic Protector Plates** *(Not included in the Skid Plates Protection Kits)*	**715010285**	**715010286**	**715010285**	**715010286**	**715010285**	**715010286**

SKID PLATES

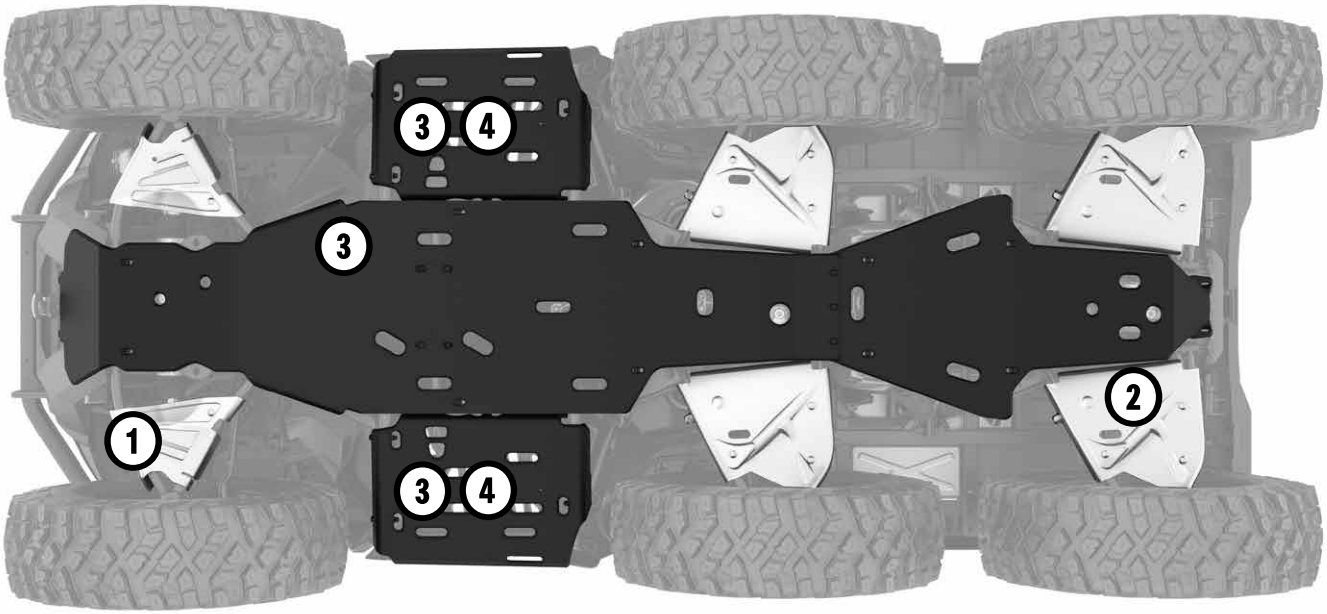

Our Skid Plates deliver the durability, strength and reliability your adventures need. Protect the underbelly of your vehicle from front to rear, with folded ends at the footwells for a little extra. They combine materials for peak protection: With aluminum A-arms and a plastic underbelly, your ride can drive across rough terrain confidently.

- Quick and easy, bolt-on installation.
  No need to remove factory skid plates.
  No more rivets or rivnuts.
- Thicker underbelly plates (10 mm).

OUTLANDER 6X6

	G3 6X6		G3L 6X6	
	Except MAX models	MAX models only	Except MAX models	MAX models only
SKID PLATE PROTECTION KIT (T Category Approved)				
	715009343 (except Backcountry models)	**715009344** (except Backcountry models)	**715009341**	**715009342**
INDIVIDUAL SKID PLATES (T Category Approved)				
(1) **Front Aluminum A-Arm Protectors**	**715009214** (except Backcountry models)		**715005305**	
NEW Front Plastic A-Arm Protectors *(Not illustrated - Not included in the Skid Plates Protection Kits)*	**715010046**	**715010046**	**715010046**	**715010046**
(2) **Rear Aluminum A-Arm Protectors** *(Sold in pairs)*	**715009215** (except Backcountry models)		**715005308**	
NEW Rear Plastic A-Arm Protectors *(Not illustrated - Not included in the Skid Plates Protection Kits)*	**715010155**	**715010155**	**715010292**	**715010292**
(3) **HMWPE Underbelly and Footboard Plates**	**715009339**	**715009340**	**715009339**	**715009340**
(4) **NEW Footwell Plastic Protector Plates** *(Not included in the Skid Plates Protection Kits)*	**715010285**	**715010286**	**715010285**	**715010286**

BUMPERS & GUARDS

XT Front Bumper

G3 (except X mr) | **715009289**

- Heavy-duty construction with profiled steel tubes provides the most complete protection for your vehicle.
- Wide and sturdy construction with black powder-coat finish and metal corners.
- Integrated tow hooks and light mounting points.
- Protects vehicle lights and corners.
- Winch compatible.
- T Category Approved.

XU Front Bumper

G3L | **715006614**

- Heavy-duty tubular construction provides the most complete protection for your vehicle.
- Protects vehicle lights and corners.
- Winch compatible.
- Integrated tow hook.
- Similar to the XU model's bumper.
- T Category Approved.

XT Front Bumper

G3L | **715004952**

- Provides additional protection for your vehicle against the elements.
- Tough and durable.
- Large tube construction with black powder coat finish.
- Similar to stock bumper on XT models.
- Mounting plate included for tow hook.
- T Category Approved.

Extreme Front Bumper Plates

G3 (except X mr models) | **715009293**

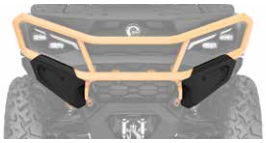

- Ultra-robust steel construction provides additional protection to the front of the vehicle in rough terrain.
- Compatible with all front bumpers.
- Durable powder coat finish.
- T Category Approved.

Not compatible with:
- Track systems.

Extreme Front Bumper Plate *

G3L (except X mr models) | **715005439**

- Ultra-robust construction provides additional protection to the front of the vehicle in rough terrain.
- Compatible with all front bumpers.

Not compatible with:
- Track systems.

Front Tow Hook

G3L | **715008842**

- Provides a solid anchor when towing is needed or when transporting the vehicle.
- Allows you to attach most hooks or straps.
- This tow hook offers 3,500 lb (1,587 kg) of towing capacity.
- Made of forged steel.

Required for installation:
- XT Front Bumper (715004952).

Not compatible with:
- Outlander XT stock bumper.

XT Rear Bumper

G3 (except 6x6 models) | **715009292**

- Made of profiled steel tubes for complete protection of the vehicle's rear.
- Provides additional protection for your vehicle against obstacles.
- Protects the rear lights of the vehicle without obstructing them.
- Wide and sturdy construction with black powder-coat finish and metal corners.
- T Category Approved.

NEW Can-Am Rear Bumper

G3 (6x6 2027 models only),
G3L (6x6 2027 models only) | **715011796**

- High-resistance steel tubular construction.
- Anti-corrosion coating with a durable powder-coat finish.
- Provides added protection to the rear.
- Requires installing the Cargo Bed Side Protectors (715009345).
- T Category Approved.

* *Installation of some accessories shown may impact vehicle compliance with some regulations. Consult your local dealer for information.*

Rear Bumper

G3 (6x6 2026 models only),
G3L (6x6 2026 models only)

715009770

- High-resistance steel tubular construction.
- Anti-corrosion coating with durable powder coat finish.
- Provides added protection to the rear.
- Requires installing the Cargo Bed Side Protectors (715009345).
- T Category Approved.

Cargo Bed Side Protectors

G3 (6x6 models only),
G3L (6x6 models only)

715009345

- 1.5" (3.8 cm) diameter steel-tube construction.
- Anti-corrosion coating with durable powder coat finish.
- 3 integrated hook points on each side to secure cargo.
- T Category Approved.

Required for installation:
- Rear Bumper (715009770 or 715011796).

Not compatible with:
- LinQ Cargo Basket (90 L) (715010173 & 715005274), LinQ Trunk Box 23 US Gal (87 L) (715009499) or LinQ Cargo Box 14 US Gal (53 L) (715010172 & 715006997).

Full Rear Bumper

G3L (except 6X6 models)

715008738

- Provides additional protection for your vehicle against obstacles.
- Protects the rear lights of the vehicle without obstructing them.
- Strong and durable, it must be added to the XT rear bumper (stock or accessory) for full protection.
- Wide and sturdy tubular construction with black powder-coat finish and metal corners.
- T Category Approved.

XT Rear Bumper

G3L (STD, DPS & X mr models only)

715004953

- Sturdy tubular construction.
- Protects the vehicle against obstacles.
- Standard on Outlander XT and Outlander PRO.
- Fits base models with grab bar only.
- Required to install the Full Rear Bumper.
- T Category Approved.

Fender Flares

G3L (except T-cat and Electric models) — **715005349**

G3L (T-cat models only) — **715006336**

- Kit is designed to deliver extra protection to your vehicle from dirt and debris. If you enjoy riding in the mud, it's a must.
- Made of injected plastic that hugs your vehicle fenders perfectly.
- Give vehicle added flair for a rugged, cool look.
- Include front and rear extensions and all mounting hardware.
- T Category Approved.

LIGHTS & ELECTRICAL

LIGHTS

NEW SMART 15" (38 cm) LED Light Bar

G3, G3L

715011661

- The perfect combination of powerful white and selective yellow LEDs.
- The selective yellow LEDs are ideal for driving in low visibility conditions.
- The light is composed of 24 white LEDs and 12 yellow LEDs.
- Spot and Flood combo beam.
- The side lens design provides highly effective wide-angle illumination.
- The white LEDs produce 12,000 raw lumens and the selective yellow 5,280 raw lumens, delivering stunning lighting performance.
- Features a signature LED light that enhances the vehicle's appearance when not activated.
- The lens is made from hard-coated polycarbonate.
- IP67 and IP69k submersible and pressure washer safe.
- Switch options: Off, Low and High. Color change by quickly flicking the switch.
- ECE R10 Certified.
- T Category Approved as Work Lamp.

Required for installation:
- Front bumper is required for all vehicles.
- Wiring Harness (715010044) or LinQ 16" Brackets for 15" LED Light Bar (715010259) with LinQ Base Installation Kit (860203055).

NEW LinQ 16" Brackets for 15" LED Light bar

G3 (except X mr models), G3L (except X mr models)

715010259

- Allows the light to be moved easily—plug-and-play.
- Higher and farther lighting point.
- Does not sacrifice the cargo rack.
- Mounted higher up, so it's less likely to be blocked by another accessory or by vegetation, brushes or tall grass.
- Brackets can only be installed at the front of the vehicle.
- Can be positioned on the drop-down cover or on a cargo box with LinQ Base Installation Kit (860203055).
- Switch is included and integrates into the console.
- Switch options: Off, Low, High and flick for yellow.

Required for installation:
- SMART 15" (38 cm) LED Light Bar (715008746) with LinQ Base Installation Kit (860203055).

SMART 10" (25 cm) LED Light Bar

G3 (except X mr models), G3L

715011660

- The perfect combination of powerful white and selective yellow LEDs.
- Selective yellow is ideal for driving in low visibility conditions.
- The light is composed of 16 white LEDs and 8 yellow LEDs.
- Spot and Flood combo beam.
- The side lens design provides highly effective wide-angle illumination.
- Features a signature LED light that enhances the vehicle's appearance when not activated.
- The white LEDs produce 8,100 raw lumens and the selective yellow 2,640 raw lumens, delivering stunning lighting performance.
- The lens is made from hard-coated polycarbonate.
- IP67 and IP69k submersible and pressure washer safe.
- Switch options: Off, Low and High. Color change by flicking the switch quickly.
- ECE R10 Certified
- T Category Approved as Work Lamp

Required for installation:
- Wiring Harness (715010044).
- Front bumper is required for all vehicles.

10" (25 cm) Double Stacked LED Light Bar (60 W)

G3 (except X mr models), G3L

715010065

- Equipped with 12 5-W Cree LEDs.
- 5,400 lumens.
- Rugged and waterproof.
- Packs a big punch for its size.
- ECE R10 Certified.
- Can also be installed on the stock front bumpers (XT and XU).
- T Category Approved as Work Lamp

Required for installation:
- XT or XU Front Bumpers (715004952, 715009289 or 715006614) and Light Power Cable (715005353).

15" (38 cm) Double Stacked LED Light Bar (90 W)

G3 (except X mr models), G3L

715010066

- Equipped with 18 5-W Cree LEDs.
- 8,400 lumens.
- Complements the Light Racks and most bumpers.
- Rugged and waterproof.
- Lights up to more than 1,900 ft (580 m) in front of the vehicle and around 65 ft (20 m) wide on each side.
- ECE R10 Certified.
- Can also be installed on the stock front bumpers (XT only).
- T Category Approved as Work Lamp

Required for installation:
- XT Front Bumper (715004952 or 715009289) and Light Power Cable (715005353).

3.5" (9 cm) LED Lights (2 X 14 W) LED Driving Lights

G3 (except X mr models), G3L (except Electric models)

715010094

- 14 W LED lights producing 1,260 lumens each.
- Equipped with 6 high power LEDs in a heavy-duty die cast aluminum housing.
- Features 2 attachment points — if one attachment point fails due to a collision, rotate to the next channel point and re-mount the light.
- Sold in pairs.
- ECE R10 Certified.
- Spot lens for a narrow and long light beam spread, ideal when driving at higher speeds.
- Can also be installed on the stock front bumpers (XT and XU).
- T Category Approved as Work Lamp.

Required for installation:
- XT or XU Front Bumpers (715004952, 715009289 & 715006614) and Light Power Cable (715005353).

3.5" (9 cm) LED Lights (2 X 14 W) LED Flood Lights

G3 (except X mr models), G3L (except Electric models)

715010093

- 14 W LED lights producing 1,260 lumens each.
- Equipped with 6 high power LEDs in a heavy-duty die cast aluminum housing.
- Features 2 attachment points — if one attachment point fails due to a collision, rotate to the next channel point and re-mount the light.
- Sold in pairs.
- ECE R10 Certified.
- Flood lens for a wide light beam spread, ideal for working applications like plowing or for cornering, or for dusty or foggy riding conditions.
- Can also be installed on the stock front bumpers (XT and XU).
- T Category Approved as Work Lamp.

Required for installation:
- XT or XU Front Bumpers (715004952, 715009289 & 715006614) and Light Power Cable (715005353).

LED Light Bar Harness

G3 (except X mr models), G3L

715010044

- Required to install SMART 10" (25 cm) LED Light Bar (715008745) and SMART 15" (38 cm) LED Light Bar (715008746).
- Plug & play installation.
- Includes harness and hardware.

Light Power Cable
(Not illustrated)

G3, G3L

715005353

- Required for installation of the 10" (25 cm) and 15" (38 cm) LED Light Bars, as well as the 3.5" (9 cm) LED Lights.

RAM† LED Spotlight

G3, G3L | **710005423**

- 540-lumen (9 W) heavy-duty LED spotlight standard-equipped with 1" (2.5 cm) diameter rubber-coated double ball and socket system.
- Not ECE Certified

ELECTRICAL

Power Tilt Bed

G3 (6x6 models only), G3L (6x6 models only) | **715009338**

- Powerful cargo box tilter with dash-integrated switch.
- Supports loads of up to 1,000 lb (453 kg).
- Features a strong and fast tilting electric actuator.

Integrated Heated Grips & Thumb Throttle Combo

G3 (except X mr 1000R), G3L | **715009284**

- Heat levels for grips and thumb displayed on vehicle screen.
- Ergonomic button integrated on LH grip.
- Single button for both grips and thumb heat selection.*
- Five temperature settings for the thumb and grips.
- Adjustable heat ratio between grip and thumb warmer.*
- Hold button to reach maximum heat quickly.
- Remembers your last heat setting.
- IP67-rated waterproof sealing keeps the elements out.
- ECE Certified.
- Plug-and-play installation.
- Clamp-on grips, no glue required.
- T Category Approved

**Models with touchscreen or color display provide enhanced user interface with independent grips and thumb heat level selection.*

Heated Passenger Grips & Visor Outlet

G3 (MAX models only), G3L (MAX models only) | **715005358**

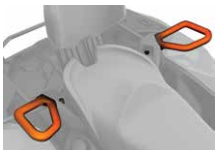

- Replace your stock passenger handles.
- Dual temperature switch integrated into seat arm for 3-zone heated handles and grips.
- Heated visor outlet integrated into seat arm.

Seat Heater

G3L, G3 (Except MAX models with removable passenger seat) | **715007211**

- 25 W seat heater delivers chill-free riding comfort.
- One temperature only.
- Heated pad and electrical harness only.

Required for installation:
- Heavy-Duty Seat Cover (715008311) is required for installation on 1-up models.
- Heavy-Duty Seat Cover (715008313) is required for installation on 2-up models.

Heated Visor Outlet

G3, G3L | **715001246**

- Strategically positioned on vehicle to maintain your agility.
- Optional visor outlet that delivers fog-free riding.
- Quick and easy installation.
- Sold individually.
- Heated Visor not included.

USB Power Outlet Kit

G3, G3L | **219400510**

- Recharges your electronic devices while riding* (smartphone, MP3, heating gear, etc.).
- Dual port USB connectors.
- Plug-and-play kit.
- Replaces the vehicle's 12 V socket.

**The power outlet is not capable of recharging all device types while riding.*

USB Intelligent Power Outlet Kit

G3, G3L | **715009117**

- Power all your electronics with this easy-to-mount USB plug.
- Provides one USB-A 3.0 and one USB-C (PD) plug.
- Power rate: 36 watts.
- Intelligent USB charger for a fast charge when battery is low.
- Replaces the vehicle's 12 V socket.

10.25 in. Color Touchscreen Display Protector

Vehicle equipped with 10.25 in. Color Touchscreen Display

860202680

- Tempered glass – 0.3 mm thick.
- 9H hardness for tough protection.
- 100% bubble-free adhesive.
- Anti-scratch, anti-glare and anti-fingerprint.
- Maintains 99.99% clarity.
- Easy to clean.
- Includes cleaning tools: wet wipe, dry wipe, dust absorber and soft cloth.

NEW 5" Color Display Screen Protector

G3L (Electric models only with 5" Color Display)

219401334

- Tempered glass – 0.5 mm thick.
- 9H hardness for tough protection.
- 100% bubble-free adhesive.
- Anti-scratch and anti-fingerprint.
- Maintains 99.99% clarity.
- Easy to clean.
- Includes cleaning tools: wet wipe, dry wipe, dust absorber and soft cloth.

NEW Peak Design Phone Holder

G3, G3L

219401317

- The Peak Design Phone Holder is the perfect way to keep your phone safe and secure on your motorcycle.
- It offers a mounting arm that can be rotated and locked into 24 different positions. This versatility ensures that your phone is always positioned exactly where you want it.
- Includes Bar Mount V2 and Universal Adapter, for all phones.
- Bar Mount:
  - Machined/anodized aluminum mounting head & arm.
  - Grippy silicone mounting pad.
  - Silicone vibration dampers.
  - High-temperature resistance mounting magnets. Engineered to maintain their magnetic strength and integrity even when exposed to elevated temperatures.
- Universal Adapter:
  - Adheres to smooth, non-textured, non-porous case materials like hard plastic and metal. Not recommended for soft or rubbery surfaces like silicone or leather.
  - 100% recycled weatherproof nylon canvas exterior shell.
  - Ultralight polycarbonate body.
  - High-temperature resistance mounting magnets.
  - High-strength ceramic locking ring.
  - Ultra-strong weatherproof 3M VHB.
  - Compatible with all Peak Design holders.

NEW Heated Cellphone Holder

G3, G3L

860202896

- Heating element preserves cellphone battery longer.
- Water-resistant door allows for optimal phone positioning.
- Features capacitive and resistive touchscreen technology.
- Spring system in back plate automatically adjusts for thickness.
- Fits all cellphones within 7.2" (18,5 cm) x 3.3" (8.5 cm) x 0.6" (1.5 cm) dimensions.
- Works with almost all charger wires.
- Does not include cellphone or charging wires.

- **Required for installation:**
  - GPS RAM Mount For Handlebar (715001985) or Console Extension (715005368) and Adaptation Harness for Heated Cellphone Holder (715010220). If installed on the Console Extension, the Console Extension USB Power Outlet (715008750) is required to charge cellphone.
  - USB Intelligent Power Outlet Kit (860202433) required to charge cellphone.

Not compatible with:
- If installed on the Console Extension, Driver Full Wrap Handguards (715005361 or 715005362), Touring Handguards (715010293 or 715010294), XT Handguards (715010296) Sport Handguards (715010297 or 715011154) are incompatible.

NEW Adaptation Harness for Heated Cellphone Holder

G3, G3L

715010220

- Requires installing the Heated Cellphone Holder (860202896).

Cellphone Holder

G3, G3L

715008786

- Water resistant door allows for perfect phone positioning.
- Features capacitive and resistive touchscreen technology.
- Spring system in back plate automatically adjusts for thickness.
- Fits all cellphones within 7.2" (185 mm) x 3.3" (85 mm) x 0.6" (15 mm) dimensions.
- Works with almost all charger wires.
- Does not include cellphone or charging wires.

Required for installation:
- RAM Mount for Cellphone Holder (715001985) or the Console Extension (715005368).
- If installed on the Console Extension, the Console Extension USB Power Outlet (715008750) is required to charge cellphone.
- If installed on the Console Extension, Driver Full Wrap Handguards are incompatible.

RAM† Mount for Cellphone Holder

G3, G3L

715001985

- Convenient bracket for installing the Cellphone Holder (715008786) (not included) onto your unit's handlebar.

C-TEK charger

860200997

- ·CTEK, the manufacturer of the smartest battery chargers in the world, has produced a BRP specific charger for all BRP products.
- ·Charger is built to meet the demanding arctic conditions.
- ·Ask your dealer for more information.

RFID Key Green D.E.S.S.™

G3 (with ITC), G3L (with ITC)

710005232

- Top-security anti-theft protection for your vehicle.
- Encrypted chip technology restricts access to your vehicle's electronic ignition system.
- One vehicle/one code.
- A vibration/shock-resistant ball-and-socket design that ensures a reliable connection.
- 3 programmable modes:
  - Work mode: Limits vehicle speed to 25 mph (40 kph) but does not limit engine torque.
  - Normal mode: Limits vehicle speed to 44 mph (70 kph) and 50% torque reduction.
  - Performance mode: No restrictions.

Charging Cable Type 2 Mode 2

G3L (Electric models only)

219401227 • US
219401266 • UK
219401260 • Europe (12A)
219401310 • Europe (8A)

- Features compact size, overheating protection mechanism, and an IP67 ingress protection rating.
- Bright and smooth panel design with built-in LED indicators.
- Operates in a wide range of temperatures (-30°C to 50°C).
- Included:
  - 1 Mobile connector - 9.5' (3 M) Cable.
  - 1 Storage bag.
  - AC Type Plug:
  - NEMA 5-15 for 219401227 (US).
  - CE Type G for 219401266 (UK).
  - CE Type E for 219401260 and 219401310 (Europe).
- Voltage: 120V (219401227) or 240V (219401266, 219401260, 219401310).
- Charging power: 12A (219401227, 219401266, 219401260) or 8A (219401310).

Charging Cable Mode 3 Type 2

G3L (Electric models only)

219401274

- A Mode 3 charging cable is a connecting cable between the charging station and the electric motorcycle.
- IP55 ingress protection rating.
- Operates in a wide range of temperature (-40°C to 50°C)

Included:
- 1 Mobile connector - 23' (7 M.) Cable.
- 1 Storage bag.
- Voltage: 480V
- Charging Power: 32A

AUDIO

Integrated Audio System

G3, G3L

715005354

- Fully integrated and weatherproof audio system.
- Includes two 6.5" front fender Bluetooth speakers giving you fingertip control of the tracks you're playing.
- Designed to be Can-Am tough in the most demanding riding conditions.
- Expertly tuned for exceptional sound, even when you're on the move on your Outlander.
- Comes with two speakers, each with 50 W dynamic power, for a total of 100 W dynamic power.
- Seamless integration and operation from any Bluetooth-enabled devices, or via an auxiliary port.
- Plug-and-play audio system specifically designed not to drain the battery.
- Compatible with the Console Extension (715005368 or 715009218) and Adventure Windshields.
- CE compliant.

Not compatible with:
- Adventure Side Wind Deflectors (715005862 or 715009462).
- Windshield Kits (715006481, 715006480, 715010902 & 715010947).

Note: We recommend you use 20 kbps MP3, 192–256 kbps AAC or AIFF, or WAV formats to match the potential of the speaker. More compressed formats will probably have degraded sound quality.

Bluetooth Handlebar Soundbar by MTX

G3 (except X mr),
G3L (except Electric models)

219400840

- Bluetooth speaker with the unbeatable convenience of fingertip control.
- Rugged IP66-rated weather-resistant speaker designed for outdoor use.
- Driven by 150 watts of quality audio power.
- Seamless integration and operation from Bluetooth enabled devices.
- Includes input, ground and ignition wires, plus auxiliary port and 3.5" (8.89 cm) connector cable.
- CE compliant.

Note: We recommend you use 320 kbps MP3, 192-256 kbps AAC or AIFF, or WAV formats to match the potential of the speaker. More compressed formats will probably have degraded sound quality.

WINCHES

CAN-AM HD WINCHES

NEW Can-Am HD 2500 Winch

G3 (except X mr models), G3L

715011435

- Ergonomic clutch handle.
- Rugged all-steel gears and bushings for more torque and longer life.
- Automatic 100% load-holding brake.
- Pulling strength capability of 2,500 lb (1,134 kg).
- 50 ft. of 3/16" (15.2 m of 4.8 mm) wire steel cable.
- Heavy-duty 4-way roller fairlead.
- Sealed solenoid for all-weather protection.
- CE & UKCA compliant.
- Operate the winch remotely when you're not on the vehicle with the Wireless Winch Remote (715008286) (sold separately).
- T Category Approved.

Required for installation:
- Winch Electrical Harness (715011150).
- Outlander Electric: Winch Electrical Harness (715011150) and Winch Harness (715009917).

NEW Can-Am HD 3500 Winch

G3 (except X mr models), G3L

715011436

- Ergonomic clutch handle.
- Rugged all-steel gears and bushings for more torque and longer life.
- Automatic 100% load-holding brake.
- Pulling strength capability of 3,500 lb (1,588 kg).
- 50 ft. of 7/32" (15.2 m of 5.2 mm) wire steel cable.
- Heavy-duty 4-way roller fairlead.
- Sealed solenoid for all-weather protection.
- CE & UKCA compliant.
- Operate the winch remotely when you're not on the vehicle with the Wireless Winch Remote (715008286) (sold separately).
- T Category Approved.

Required for installation:
- Winch Electrical Harness (715011150).
- Outlander Electric: Winch Electrical Harness (715011150) and Winch Harness (715009917).

NEW Can-Am HD 3500-S Winch

G3 (except X mr models), G3L

715011323

- Ergonomic clutch handle.
- Rugged all-steel gears and bushings for more torque and longer life.
- Automatic 100% load-holding brake.
- Pulling strength capability of 3,500 lb (1,588 kg).
- 50 ft. of 3/16" (15.2 m of 4.8 mm) synthetic rope.
- Heavy-duty Hawse fairlead.
- EPDM Winch Cable Stopper included (715009921).
- Can-Am Winch Hook included (715011610).
- Sealed solenoid for all-weather protection.
- CE and UKCA compliant.
- Operate the winch remotely when you're not on the vehicle with the Wireless Winch Remote (715008286) (sold separately).
- T Category Approved.

Required for installation:
- Winch Electrical Harness (715011150).
- Outlander Electric: Winch Electrical Harness (715011150) and Winch Harness (715009917).

NEW Rear Winch Kit

G3 (6x6 models only), G3L (6x6 models only)

715009334

- Includes the Can-Am HD Winch 3500-S and Rear Mounting Kit.
- Ergonomic clutch handle.
- Rugged all-steel gears and bushings for more torque and longer life.
- Automatic 100% load-holding brake.
- Corded 10 ft (3 m) weather-sealed, wired remote control (sold separately).
- Pulling strength capability of 3,500 lb (1,588 kg).
- 50 ft of 3/16" (15.2 m of 4.8 mm) synthetic rope.
- Heavy-duty Hawse fairlead.
- Sealed solenoid for all-weather protection.
- Plug-and-play.
- CE and UKCA compliant.
- T Category Approved

Required for installation:
- Can-Am HD Wired Remote Control (715008121) or the Wireless Remote (715008286) is required if there is no front winch.

NEW Can-Am Rear Winch

G3 (except 6x6 models), G3L (except 6x6 models)

715010195

- Includes the Can-Am HD Winch 3500-S, Rear Mounting Kit and a rear bumper reinforcement.
- Ergonomic clutch handle.
- Rugged all-steel gears and bushings for more torque and longer life.
- Automatic 100% load-holding brake.
- Pulling strength capability of 3,500 lb (1,588 kg).
- 39.3 ft of 3/16" (11.9 m of 4.8 mm) synthetic rope.
- Heavy-duty Hawse fairlead.
- Sealed solenoid for all-weather protection.
- Features a heat deflector that protects the winch.
- Winch control selector switch for front or rear operation.
- Plug-and-play.
- CE and UKCA compliant.
- G3L: Compatible with XT Rear Bumper (715004953).
- T Category Approved.

Required for installation:
- Outlander: Can-Am HD Wired Remote Control (715008121) or the Wireless Remote (715008286) is required if there is no front winch.
- Outlander with Color Display: Can-Am HD Wired Remote Control (715008121) or the Wireless Remote (715008286).
- Outlander Electric: Winch Harness (715009917) and Can-Am HD Wired Remote Control (715008121) or the Wireless Remote (715008286).

Not compatible with:
- Can-Am Retractable Rope System (715010190).

WINCH ACCESSORIES

NEW Can-Am HD Winch Auto-Stop

G3, G3L | **715010305**

- The Auto Stop Mechanism pauses rope intake to avoid over-spooling and keep your synthetic rope protected for long-term use.
- Requires synthetic winch rope (NOT compatible with steel cable).

Not compatible with:
- Can-Am Rear Winch (715010195 and 715009334).

NEW Can-Am HD Winch Hook

Can-Am HD Winch | **715011610** • Platinum Silver

- Heavy-duty, forged and heat-treated steel hook for maximum strength.
- Unique and premium design with a Can-Am-stamped logo.
- Durable cast-aluminum latch with a functional 1" opening.
- Integrated pulling strap for quick and easy handling.
- Finished with a platinum-silver powder coating for long-lasting protection.

NEW Winch Electrical Harness
(Not illustrated)

Can-Am HD Winch | **715011150**

- Required for the installation of the Can-Am HD Winches.

Required for installation:
- Outlander Electric: need to add Winch Harness (715009917).

X mr Winch Strap Extension for Plow

G3 X mr | **715010174**

- Heavy-duty black polyester webbing strap with PVC abrasion protection.
- UV, mildew and stretch resistant.
- Provides a physical height limiter to enhanced frame protection, avoiding contact between plow pushframe and the vehicle.
- Instantly adds significant length to your winch hook.

Wireless Winch Remote

All Can-Am HD Winches | **715008286**

- On/Off and Winch In/Winch Out buttons with LED indicator light.
- Large Winch In/Winch Out buttons for easy activation with gloves.
- Ergonomic remote handle shape with a trigger-like holding protrusion.
- Quick and easy to install, thanks to a wiring harness with an integrated antenna and all necessary mounting hardware.
- Allows you to operate your winch from anywhere within a 50' (15.2 m) radius, increasing your recovery options.
- All components are IP67 sealing rated.
- The remote also floats in case it's dropped during a deep water recovery.
- Dash and handlebar mounting options.
- Compatible with all Can-Am HD winches.

Winch Cable Stopper

All Can-Am HD Winches | **715009921**

- Made of EPDM, a highly durable synthetic rubber.
- The Winch Cable Stopper isn't just for looks. It helps extend the life of the winch, rope, hook and fairlead.
- In addition, the split design makes it easy to install.

NEW Replacement Synthetic Winch Cable
(Not illustrated)

Can-Am HD Synthetic Winch | **715011151**

- 50' x 3⁄16" (15.24 m x 4.76 mm) UHMWPE construction.
- Heavy-duty stainless steel eye guard.
- Very low stretch for consistent performance.
- Replace your old cable in 15 minutes or less.
- No kinks, curls, rust or splinters.
- Safe and easy to handle.
- Floats on water for easier recovery.

NEW Replacement Synthetic Winch Cable
(Not illustrated)

Can-Am HD Synthetic Winch | **715011668**

- 38' x ¼" (11.58 m x 6.35 mm) UHMWPE construction.
- Heavy-duty stainless steel eye guard.
- Very low stretch for consistent performance.
- Replace your old cable in 15 minutes or less.
- No kinks, curls, rust or splinters.
- Safe and easy to handle.
- Floats on water for easier recovery.

Winch Harness

G3L (Electric models only)	**715009917**

- Required to install a winch on a Outlander Electric without a factory installed winch.

Can-Am HD Wired Remote Control

Can-Am HD Winches	**715008121**

- This kit allows owners to add a handheld remote to their winch or a stock winch.
- Works with the handlebar-mounted switch.
- Wired Remote and Remote Socket included.
- 10 ft. wire.

Winch Accessories Kit

715002409

- Get the most out of your winch.
- Double your pulling power, change your pulling direction and keep your winch in proper working order.
- Includes tree straps, snatch block, shackle and winching gloves.

HITCHES

HITCHES

NEW Rear Hitch Drawbar Kit *

G3, G3L	**715011530**

- Works on 2" (5 cm) standard receiver hitch.
- It offers 1,650 lb (750 kg) of towing capacity.
- Solid steel construction.
- Extended length design for easier rear hitch access.

Front Receiver Hitch *

G3, G3L	**715004977**

- Installs easily. No drilling required.
- This hitch offers a 1,500 lb (680 kg) towing capacity.
- Allows you to maneuver your trailer easily in tight, confined areas.
- Hitch bar sold separately.

Rear Hitch Drawbar Kit

G3, G3L	**715006230**

- Works on 2" (5 cm) standard receiver hitch.
- Offers a towing capacity of 3.8 kN (R = 750 kg).
- 50 mm Hitch Ball included.
- Forged steel.
- For European vehicles only.
- T Category Approved

HITCH ACCESSORIES

Rubber Receiver Plug *

705204503

- Rubber cap for 2" (5 cm) hitch receiver.

* *Installation of some accessories shown may impact vehicle compliance with some regulations. Consult your local dealer for information.*

Multitrailer

619590024

- Bogie wheels updated to be more silent than before and now equipped with grease nipples.
- Product developed for heavy-duty use.
- 100% galvanized steel.
- Specifications: 12 mm polywood base, strong stand, movable attachment points (4 pc), tipping bed, removable sides and 4 pc timber holder.
- Underside of the bogie and frame designed to travel over stones and logs (no sharp edges).
- Bed length: 182 cm
- Bed width: 66 cm bottom / 95 cm top
- Bed height: 60 cm
- Weight: 200 kg with timber holders and sides

RECOVERY

NEW Can-Am Retractable Rope System

G3, G3L | **715010190**

- Tow a disabled vehicle easily.
- 11 ft self-retracting tow rope for quick and convenient operation.
- 13,000 lb (5,910 kg) rope breaking strength.
- 2,600 lb (1,180 kg) rope working load limit.*
- Ready to use with an integrated soft shackle for simple hookup.
- Rope is easy to replace with no threading required.
- Lightweight design makes it easier to carry, thanks to its built-in handle.
- Weight: 14.7 lb (6.67 kg).
- Compact design fits all Can-Am off-road hitch receivers and most units with a 2" receiver.
- Features a built-in tow hook.

Not compatible with:
- Can-Am Rear Winch (715010195 or 715009334).

**Never exceed vehicle max towing capacity.*

NEW Can-Am Winch Accessory Kit

G3, G3L | **715010814**

- Complete recovery kit featuring a Can-Am Soft Shackle (715010577), Recovery Ring (715010836) and Tree Saver Strap.
- Durable Tree Saver Strap—8' x 3" wide with folded eyes and an abrasion guard.
- Includes a carrying bag to keep all components organized.
- For synthetic rope only.

NEW Can-Am Kinetic Recovery Kit

G3, G3L | **715010837**

- Includes a Kinetic Rope (715010835) and two Soft Shackles (715010577).
- Comes with a practical roll-top carrying bag that offers plenty of space to add additional recovery accessories.
- Features drain hole to allow water to escape.

NEW Front Tow Hook

G3, G3L | **715010191** • Viper Red

- Provides a solid anchor when towing is needed or when transporting the vehicle.
- Bolts straight on to the Outlander front end below the bumper with or without a winch.
- Made of heavy-duty steel specifically designed for recovery.
- Allows you to attach most hooks or straps.
- This Tow Hook offers 3,500 lb (1,587 kg) of towing capacity.

NEW Can-Am Soft Shackle

G3, G3L | **715010577**

- ⅜ in. (9.5 mm) x 12 in. (30.4 cm) loop UHMWPE soft shackle.
- 21,000 lb (9,525 kg) breaking strength.
- 4,200 lb (1,905 kg) working load limit.
- Lightweight, ultra-strong 12-strand UHMWPE braid offers steel-like strength with added flexibility.
- Provides a quick, strong connection thanks to the “dog bone” rigid piece, which easily locks the loop.
- Protective covering to reduce early damage.

NEW 2" Soft Shackle Hitch Receiver

G3, G3L | **715010784**

- Provides a reliable recovery solution that plugs directly into any 2" receiver.
- 8,000 lb (3,636 kg) working load limit.
- Forged aluminum construction with a durable viper-red powder-coated finish.
- Easy installation: slide the shackle mount into the receiver and secure it with a hitch pin (not included).
- Compatible with the Can-Am Soft Shackle (715010577) for a complete recovery setup.

NEW Can-Am Kinetic Recovery Rope (⅝" x 25')

G3, G3L | **715010835**

- 15,000 lb (6,803 kg) breaking strength.
- 3,000 lb (1,360 kg) working load limit.
- Product size: ⅝" x 25' (16 mm x 7.6 m).
- Our kinetic energy rope stretches up to 30%.
- Each rope is built from heavy-duty synthetic fiber engineered to withstand repeated use in the harshest off-road conditions. Reinforced protective sleeves add extra durability and help guard against wear in high-friction areas.
- Kinetic ropes provide superior pulling power by stretching up to 30% to store and release kinetic energy.
- This controlled stretch reduces shock on both vehicles, making recoveries smoother and safer than traditional tow straps.
- From mud to sand to snow, these ropes deliver the forward momentum needed to break free.

NEW Recovery Ring

G3, G3L | **715010836**

- Change the direction of your pull.
- Machined from premium aluminum alloy.
- Features a black hard-anodized, ultra-smooth, low-friction finish that delivers long-lasting durability in a sleek design.
- This recovery ring is perfectly sized to fit Can-Am Soft Shackle (715010577) and works flawlessly with synthetic winch ropes below ½".
- Working load limit: 6,600 lb.
- Minimum breaking strength: 33,000 lb.
- For use with synthetic winch rope only and a soft shackle.

PERFORMANCE

PERFORMANCE

Fixed Riser – 1.5 in. (38 mm)

G3 (except X mr 1000R, XT-P & Backcountry models), G3L | **715009919**

- 1.5" (38 mm) height.
- Made of lightweight machined aluminum.
- Black powder coat paint.
- T Category Approved.

Performance Sway Bar Kit

G3 2025 & up (except XU, XT-P, X mr, Backcountry & Limited) | **715010580**

- Made of high-strength steel for durability and precision.
- Double bonded rubber bushings on sway bars reduce noise and maintenance and increase durability.
- Includes complete hardware.
- T Category Approved.

Foam Air Filter by TwinAir†

G3L (except Electric models) | **715004944**
G3 | **715009125**

- Oiled filtering foam for superior dust retaining capacity with high air flow.
- Washable and reusable.

NEW Snorkel Kit

G3, G3 MAX (except all X mr models) | **715009975**

- Raises point of engine and CVT air intakes.
- Allow to semi-submerse the vehicle in water/mud without taking in water to the engine, differential and transmission.
- T Category Approved.

Required for installation:
- Radiator Relocator Kit (715009127)

Not compatible with:
- Front Cargo Boxes
- Console Extension (715009218).
- Adjustable Adventure Windshield (715009453).
- Adventure High Windshield - Hardcoated (715009458).
- Ajustable Adventure Low Windshield (715009219).
- Adventure Side Wind Deflectors (715009462).
- Handlebar Muffs (715009288).
- High Windshield Kit (715006480 or 715010902).
- Extra High Windshield (715006481 or 715010947).
- Radiator Protector (715005333)

Snorkel Kit

G3L (except Electric models)

715005073

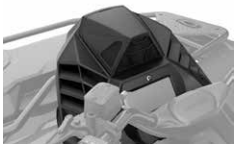

- Comprehensive snorkel kit for extended air intakes and CVT exhaust.
- The CVT outlet integrates into the pod cover.
- Ideal when riding in muddy conditions.
- Can be installed with the Integrated Audio System (715005354).
- T Category Approved.

Not compatible with:
- Windshields.

NEW Radiator Relocator Kit

G3 (except X mr models)

715009127

- Relocates radiator to top mount position.
- Prevents cooling performance loss in muddy conditions.
- Allows riders to open the relocator hood for easy radiator cleaning.
- Engineered for easy cooling system bleeding and maintenance.
- Includes support, hardware and hoses.
- Uses existing radiator: radiator not included.
- T Category Approved.

Not compatible with:
- Front Cargo Boxes.
- Console Extension (715009218).
- Adjustable Adventure Windshield (715009453).
- Adventure High Windshield – Hardcoated (715009458).
- Ajustable Adventure Low Windshield (715009219).
- Adventure Side Wind Deflectors (715009462).

Radiator Relocator Kit

G3L (except Electric models)

715004943

- Relocates radiator to top mount position.
- Prevents cooling performance loss in muddy conditions.
- Allows riders to open the relocator hood for easy radiator cleaning.
- Engineered for easy cooling system bleeding and maintenance.
- Includes support, hardware and hoses. Uses existing radiator: radiator not included.
- T Category Approved

Mud Strap

G3, G3L

715003053

- Convenient sturdy grab-handle.
- Lets drivers redistribute their weight for improved traction in demanding conditions.

Radiator Protector

G3 (except X mr models)
G3L (except X mr models)

715005333

- Metal shield mounts over radiator face and protects vehicle from stones and branches.
- Easily slides out of its holder for easy cleaning.

Heavy Duty Spring Kits

G3L (except MAX, X mr and Electric models)

715008202 • Front
715004942 • Rear

- Allows riders to replicate the standard HD5/HD7 suspension setup on the Outlander 500/700 (1-up).
- The heavy-duty springs improve handling and provide enhanced stiffness, which is perfect for snow clearing and hauling heavy loads.
- Two springs included in the kit.

Aluminum Footpeg Kit

G3, G3L

715008199

- Provides maximum integrated grip and stability during vigorous riding.
- The kick-up end gives riders added grip during hard cornering.
- Made of aluminum, sold in pairs.

COVERS & ADD-ONS

Heavy-Duty Seat Cover

G3 (except MAX models)
G3L (except MAX models)

715008311

- Heavy-duty materials to cover and protect the seat.
- Designed to fit the vehicle's lines perfectly.
- Abrasion- and tear-resistant.
- Easily installed by stretching around the original seat: the elastic holds the cover securely in place.

Heavy-Duty Seat Cover

G3L (MAX models without removable passenger seat)

715008313

- Heavy-duty materials to cover and protect the seat.
- Designed to fit the vehicle's lines perfectly.
- Abrasion- and tear-resistant.
- Easily installed by stretching around the original seat: the elastic holds the cover securely in place.

Trailering Cover

G3, G3L (except MAX & 6x6 models)	**715010578**
G3, G3L (MAX models only & except 6x6 models)	**715010579**

- Weather-resistant trailering cover protects your vehicle during storage and transportation.
- Fuel tank can be accessed via a zip fastener.
- Heavy-duty canvas made of UV-resistant solution-dyed polyester.
- Inner soft liner protects windshield and colored panels from abrasion.
- Quick and easy clip-on installation.
- Designed with the vehicle to fit its lines perfectly for less wind resistance and less water accumulation.
- Can be installed with or without Can-Am accessories.

Flag

715000277 • Yellow

- Make sure everyone knows what you're riding.
- Perfect for the dunes and new riders.
- 5'6" (1.7 m) length.
- Includes Flag Mount (715000127).

Ratchet Tie-Downs

715008309 • Black/Gray

- 400 lb (181 kg) safe working load.
- 1" x 10' (2.5 cm x 3 m) strap with Can-Am, Sea-Doo and Ski-Doo logos.
- Deluxe ratchet with rubber handle.
- Coated S hooks.
- Pack of 2.

Heavy-Duty Ratchet Tie-Down

715008308

- 1,000 lb (454 kg) safe working load.
- 1.5" x 6' (38 mm x 1.8 m) strap with BRP brands.
- Deluxe ratchet with rubber handle.
- Black-coated clip hooks.
- 12" (300 mm) webbing included.
- Pack of two.

NEW Lockable Fuel Cap

G3L, G3

715011132

- Protect your fuel
- 2 keys included

APACHE TRACK SYSTEMS

APACHE XC AND XC LT

Apache XC LT Track System *

G3 (except 6x6 models)
G3L (except 6x6 models)

715007719

- Long Track version.
- Brand-new track design to optimize driving off and in deep snow conditions.
- Reduction in steering effort thanks to the tandem 4 wheels.
- Vibrations are reduced due to the alignment of the wheels with the rolling band of the track and the shaft damper mounted tandem.
- Better steering precision with this wheel and track alignment due to good ground contact.
- 1.25" (3.175 cm) lugs in the front and in the back for better traction and lateral stability.
- Track width: front 12.5" and rear 15".
- Adds 3" (7.62 cm) of ground clearance versus 27" tires.
- Additional shaft dampers, tandem dampers, track design and wheel layout significantly reduce NVH (noise vibration harshness).
- Central guide for optimized track alignment and reduced occurrences of detracking.
- Optimized track layout with increased angle of attack for better obstacle crossing and snow performance.
- Stamped and welded steel frame for improved strength and durability.
- Easy maintenance with replaceable hub and wheel bearings.
- Main hub is oil bath with 3 bearings inside for consistent lubrication.
- Mounting kit sold separately.

Required for installation:
- DPS module and engine and CVT pre-filter.

Apache XC Track System *

G3 (except 6x6 models)
G3L (except 6x6 models)

715008664

- Brand-new track design to optimize driving off and in deep snow conditions.
- Reduction in steering effort thanks to the tandem 4 wheels.
- Vibrations are reduced due to the alignment of the wheels with the rolling band of the track and the shaft damper mounted tandem.
- Better steering precision with this wheel and track alignment due to good ground contact.
- 1.25" (3.175 cm) lugs in the front and in the back for better traction and lateral stability.
- Track width: front 12.5" and rear 15".
- Adds 3.25" of ground clearance vs. 25" tires.
- Additional shaft dampers, tandem dampers, track design and wheel layout significantly reduce NVH (noise vibration harshness).
- Central guide for optimized track alignment and reduced occurrences of detracking.
- Optimized track layout with increased angle of attack for better obstacle crossing and snow performance.
- Stamped and welded steel frame for improved strength and durability.
- Easy maintenance with replaceable hub and wheel bearings.
- Main hub is oil bath with 3 bearings inside for consistent lubrication.
- Mounting kit sold separately.

Required for installation:
- DPS module and engine and CVT pre-filter.

Apache XC & XC LT Mounting Kit *
(Not illustrated)

G3 (except 6x6 models)
G3L (except 6x6 models)

715008264

- Required for installation of the Apache XC and XC LT Track System.
- Track DPS Module and Pre-Filter not included.

APACHE BACKCOUNTRY

Apache Backcountry Track System *

G3 (except 6x6 models)
G3L (except 6x6 & Electric models)

715005247

- Designed to deliver the best flotation level and deep-snow performance on the market.
- Contact patch is 23% bigger than the Apache 360 LT.
- Impressive added ground clearance of 7" (18 cm) keeps the vehicle out of deep snow.
- Aggressive track design with 2" (5 cm) lug height for maximum traction on snow.
- For winter use only.

Required for installation:
- Apache Backcountry Mounting Kit and engine and air intake pre-filters.

Apache Backcountry Mounting Kit *
(Not illustrated)

G3 (except 6x6 models)
G3L (except 6x6 & Electric models)

715010045

- Required to install Apache Backcountry Track System.
- DPS module and pre-filter not included.
- Improved installation time and switch seasons faster than ever.

* *Installation of some accessories shown may impact vehicle compliance with some regulations. Consult your local dealer for information.*

APACHE 360 & 360 LT

Apache 360 Track System *

G3L (except Electric models) | **715006323**

- Multifunctional tracks perfect for any Can-Am ATV.
- Average ground clearance of 16" (41 cm).
- 1" (2.5 cm) lugs in the front and 1.25" (3.2 cm) in the back.
- Apache 360 and 360 LT Mounting Kit and engine and air intake pre-filters are required.
- EC compliant.

Apache 360 LT Track System *

G3L (except Electric models) | **715005103**

- Multifunctional tracks designed to support heavy loads and to fit on most Can-Am Off-Road vehicles.
- Front wheel height adjustment provides enhanced attack angle and better performance over rough terrain when raised or increased contact patch for improved flotation when lowered.
- Average ground clearance of 16" (41 cm).
- 1" (2.5 cm) lugs in the front and 1.25" (3.2 cm) in the back.
- Reliable heavy-duty build.
- EC compliant.
- Contact patch is 7 to 9% bigger than the Apache 360's.
- Apache 360 and 360 LT Mounting Kit, Track DPS Module and Engine and Air Intake Pre-filters are required.

Apache 360 & 360 LT Mounting Kit *
(Not illustrated)

G3L (except Electric models) | **715004992**

- Required to install Apache 360 and 360 LT Track Systems.
- DPS module and pre-filter not included.
- Improved installation time and switch seasons faster than ever.

APACHE TRACK SYSTEM ACCESSORIES

Track DPS Module *
(Not illustrated)

G3L (without iTC)	**715007338**
G3 G3L (with iTC)	**715006266**

- An innovative DPS module that ensures speedometer accuracy and optimized steering assist, which make for perfect track control and riding ease.
- Required to install the Apache and Backcountry Track Systems.

Air Intake Engine Pre-filter

G3
G3L (except Electric models) | **715008314**

- Adds extra protection for your engine in harsh riding conditions.
- The filter blocks particles larger than 0.005".
- Necessary when tracks are installed.

Idler Wheel Kit

Apache Backcountry Track System (rear tracks only) | **860201230** • 141 mm

- Reduces drag and rolling resistance.
- Includes 2 wheels, brackets and hardware.
- Add up to 2 kits per rear track.
- Can extend slider life in hardened snow conditions.

Slider with Vespel† Insert

Apache Backcountry Track System | **503194815**

- Use DuPont Vespel inserts for less friction.
- Longer life.
- Can be cut to desired length.
- 8 needed per vehicle.
- Sold individually.

Rail Ice Scratchers

Apache Backcountry Track System | **860201728**

- Provide additional lubrication in hard and icy conditions.
- Rail mounted, small, light.
- Design expands on coil concept to allow reversing without damage.
- Easily stored when not in use.

* *Installation of some accessories shown may impact vehicle compliance with some regulations. Consult your local dealer for information.*

APACHE TRACK SYSTEMS FITTING GUIDE

APACHE BACKCOUNTRY

Model Year / Model		Track	Track Mount	Track DPS Module	Engine Pre-filter	CVT Pre-filter
2023 & Up	G3L G3	**715005247**	**715010045**	**715007338** (without iTC) OR **715006266** (with iTC)	**715008314** (except Electric models)	Not required

APACHE XC AND XC LT

Model Year / Model		Track	Track Mount	Track DPS Module	Engine Pre-filter	CVT Pre-filter
2023 & Up	G3L G3	**715007719** (Apache XC LT) and **715008664** (Apache XC)	**715008264**	**715006266** (with iTC) OR **715007338** (without iTC)	**715008314** (except Electric models)	Not required

APACHE 360 AND APACHE 360 LT

Model Year / Model		Track	Track Mount	Track DPS Module	Engine Pre-filter	CVT Pre-filter
2023	G3L	**715006323** (Apache 360) OR **715005103** (Apache 360 LT)	**715004992**	**715007338** (without iTC) OR **715006266** (with iTC)	**715008314**	Not required

PROMOUNT PLOWS

PROMOUNT PLOW KITS

STEEL – REFERENCE CHART

	54" Black Steel	60" Black Steel	66" Black Steel	72" Black Steel
Plow Kit	**715006202**	**715006203**	**715006205**	—
Blade	**715004472**	**715004202**	**715009881**	**715009877**
Push Frame	**715004980**	**715004980**	**715004980**	**715004980**
Mounting Kit	**715009483**	**715009483**	**715009483**	**715009483**

FLEX2 – REFERENCE CHART

	60" Flex2	66" Flex2	72" Flex2
Plow Kit	**715006204**	**715008206**	—
Blade	**715004203**	**715009883**	**715009868**
Push Frame	**715004980**	**715004980**	**715004980**
Mounting Plate	**715009483**	**715009483**	**715009483**

STEEL PLOWS

Can-Am ProMount 54" (137 cm) Steel Plow Kit

G3, G3L

■ **715006202** • Black

This kit includes:
- Can-Am ProMount Steel Blade
- Push Frame with Quick-Attach System
- Mounting Kit
- Plow Roller Fairlead

Can-Am ProMount 60" (152 cm) Steel Plow Kit

G3, G3L

■ **715006203** • Black

This kit includes:
- Can-Am ProMount Steel Blade
- Push Frame with Quick-Attach System
- Mounting Kit
- Plow Roller Fairlead

Can-Am ProMount 66" (168 cm) Steel Plow Kit

G3, G3L

■ **715006205** • Black

This kit includes:
- Can-Am ProMount Steel Blade
- Push Frame with Quick-Attach System
- Mounting Kit
- Plow Roller Fairlead

Can-Am ProMount Steel Blade 54" (137 cm)

Fits ProMount Push Frame

■ **715004472** • Black

- Blades available individually to create your own kit.
- Compatible with Can-Am ProMount Blade accessories to further enhance plow versatility (some plow accessories are not compatible with 54" (137 cm) plows).
- Clears 50" (127 cm) when plow is fully angled.
- Blade height of 14.75" (37 cm).

Not compatible with:
- ProMount Drift Cutters, Blade Extensions and Edge Markers.

Can-Am ProMount Steel Blade 60" (152 cm)

Fits ProMount Push Frame

■ **715004202** • Black

- Blades available individually to create your own kit.
- Compatible with Can-Am ProMount Blade accessories to further enhance plow versatility.
- Clears 54" (137 cm) when plow is fully angled.
- Blade height of 17" (43 cm).

Can-Am ProMount Steel Blade 66" (168 cm)

Fits ProMount Push Frame

■ **715009881** Black

- Now with an improved shoe design for better flotation with an easy and quick tool-free adjustment.
- Plow blade made from 12-gauge steel.
- Replaceable wear blade.
- Large pin designed for easy blade rotation to eliminate snow buildup at pivot point.
- Blade design provides best snow roll-off at any angle.
- Clears 60" (152 cm) when plow is fully angled.
- Blade height of 17" (43 cm).
- Compatible with Can-Am ProMount Blade accessories to further enhance plow versatility.

Can-Am ProMount Steel Blade 72" (183 cm)

Fits ProMount Push Frame

■ **715009877** • Black

- Now with an improved shoe design for better flotation with an easy and quick tool-free adjustment.
- Plow blade made from 12-gauge steel.
- Replaceable wear blade.
- Large pin designed for easy blade rotation to eliminate snow buildup at pivot point.
- Blade design provides best snow roll-off at any angle.
- Clears 66" (168 cm) when plow is fully angled.
- Blade height of 17" (43 cm). Compatible with Can-Am ProMount Blade accessories to further enhance plow versatility.

CAN-AM ProMount FLEX2 PLOW KIT

Can-Am ProMount 60" (152 cm) Flex2 Plow Kit

G3, G3L

■ **715006204** • Black

This kit includes:
- Can-Am ProMount Flex2 Blade
- Push Frame with Quick-Attach System
- Mounting Kit
- Plow Roller Fairlead

Can-Am ProMount 66" (168 cm) Flex2 Plow Kit

G3, G3L

■ **715008206** • Black

This kit includes:
- Can-Am ProMount Flex2 Blade
- Push Frame with Quick-Attach System
- Mounting Kit
- Plow Roller Fairlead

Can-Am ProMount Flex2 60" (152 cm) Blade

Fits ProMount Push Frame

715004203

- Plow blade made of UHMWPE, a flexible and impact absorbing material that prevents damage to your plow when accidental impacts occur.
- Replaceable wear blade.
- Large pin designed for easy blade rotation to eliminate snow buildup at pivot point.
- Blade design provides best snow roll-off at any angle.
- Compatible with Can-Am ProMount Blade accessories to further enhance plow versatility.
- Clears 54" (137 cm) when plow is fully angled.
- Blade height of 17" (43 cm).

Can-Am ProMount Flex2 66" (168 cm) Blade

Fits ProMount Push Frame

715009883

- Now with an improved shoe design for better flotation with an easy and quick tool-free adjustment.
- Plow blade made of UHMWPE, a flexible and impact absorbing material that prevents damage to your plow when accidental impact occurs.
- Replaceable wear blade.
- Large pin designed for easy blade rotation to eliminate snow buildup at pivot point. Blade design provides best snow roll-off at any angle.
- Clears 60" (152 cm) when plow is fully angled.
- Blade height of 17" (43 cm).
- Compatible with Can-Am ProMount Blade accessories to further enhance plow versatility.

Can-Am ProMount Flex2 72" (183 cm) Blade

Fits ProMount Push Frame

715009868

- Now with an improved shoe design for better flotation with an easy and quick tool-free adjustment.
- Plow blade made of UHMWPE, a flexible and impact absorbing material that prevents damage to your plow when accidental impacts occur.
- Replaceable wear blade.
- Large pin designed for easy blade rotation to eliminate snow buildup at pivot point.
- Blade design provides best snow roll-off at any angle.
- Compatible with Can-Am ProMount Blade accessories to further enhance plow versatility.
- Clears 66" (168 cm) when plow is fully angled.
- Blade height of 17" (43 cm).

ANGLE PLOWS

Can-Am ProMount Angle Blade 60" (152 cm) Steel Oneway State

G3, G3L

715007261

- Make the job easier with the right tools, clear long alleys and make the task easier by sending the snow further out of the way.
- Wing end of plow measures 25" (63 cm) high and tapers down to 17" (43 cm).
- One-way “winged” state plow designed to throw snow higher.
- Rubber Flap (715007299) designed to keep snow away from the driver is offered as accessory (sold separately).
- Can-Am branded.

Can-Am ProMount Angle Blade 72" (183 cm) Steel Oneway State

G3, G3L

715009879

- Now with an improved shoe design for better flotation with an easy and quick tool-free adjustment.
- Wing end of plow measures 26" (67 cm) high and tapers down to 17" (43 cm).
- One-way “winged” state plow designed to throw snow higher.
- Rubber Flap (715007299) designed to keep snow away from the driver is offered as accessory (sold separately).
- Can-Am branded.

ProMount One-Way State Blade Rubber Flap

(Not illustrated)

715007299

- Allows for more efficient snow projections in various snow conditions.

CAN-AM ProMount PLOW ACCESSORIES

Can-Am ProMount Push Frame with Quick-Attach System

G3, G3L

715004980

- Heavy-duty steel tubes designed to withstand the roughest use.
- Mount location provides the ultimate push strength and traction.
- Designed for maximum plow lift height.
- Features a self-aligning quick-attach system, an easy foot-release pedal and an ergonomic handle for plow angle adjustment.
- Allows blade to swivel left or right in five positions.
- Compatible with all Can-Am ProMount blades.
- Plow Roller Fairlead and Plow Limit Switch recommended to extend winch cable lifespan.

Required for installation:
- Can-Am ProMount Mounting Kit.
- G3 X mr models: X mr Winch Strap Extension for Plow (715010174).

Can-Am ProMount Plow Angling System

G3, G3L

715010904

- Converts your plow system into an easy-to-control unit from the driver's seat.
- Using one hand to control all plow motions will allow you to easily concentrate and manage your plowing tasks.
- Compatible with ProMount Blade.
- Winch and plow sold separately.

Required for installation:
- Push Frame (715010845) is required.
- Push Frame Extension (715006257) is required for installation with the Front Rancher Bumper.

Not compatible with:
- Apache Backcountry LT Track System.

Can-Am ProMount Push Frame Extension

G3, G3L

715006257

- 12" (30 cm) push frame extension.
- Required when plow is installed with Apache Track System.

Can-Am ProMount Mounting Kit

G3, G3L

715009483

- Required to install the Can-Am ProMount Push Frame with Quick-Attach System.
- 20 mm mounting rods are designed to stay in place all year round without compromising on ground clearance.
- No drilling required.
- Quick installation directly to the chassis.
- Plow Roller Fairlead included.

NEW Plow Pins

G3, G3L

715004979

- Required to install the Can-Am ProMount Push Frame with Quick-Attach System.
- 20 mm mounting rods are designed to stay in place all year round without compromising on ground clearance.
- No drilling required.
- Quick installation directly to the chassis.

Plow Quick Adjust Blade Shoes

ProMount Steel & Flex2 Blades 54" & 60" (all years), 66"& 72" (2025 & prior)

715009751

- Zinc-plated steel construction for corrosion resistance.
- Easy and quick tool-free adjustment.
- Pre-set adjustment for different heights.
- Larger shoe diameter for greater ground contact.
- Improved shoe design for better flotation.

X mr Winch Strap Extension for Plow

G3 X mr

715010174

- Heavy-duty black polyester webbing strap with PVC abrasion protection.
- UV, mildew and stretch resistant.
- Provides a physical height limiter for enhanced frame protection, avoiding contact between plow pushframe and the vehicle.
- Instantly adds significant length to your winch hook.

Can-Am ProMount Edge Markers

G3, G3L | **715004206**

- Help locate the edges of your plow.
- Height: 24" (60 cm).
- Sold in pairs.
- Compatible with Can-Am ProMount Steel and Flex2 Blades with or without Blade Extensions (except for the Can-Am ProMount Steel 54" (137 cm) Blades).

Can-Am ProMount Drift Cutters

G3, G3L | **715006258**

- Help keep snow in the plow.
- Dimensions: 17" x 13" (43.2 cm x 33 cm).
- Sold in pairs.
- Compatible with Can-Am ProMount Steel and Flex2 Blades with or without Blade Extensions (except for the Can-Am ProMount Steel 54" (137 cm) Blades).

Can-Am ProMount Plastic Wear Blade

G3, G3L

715004480 • 54" (137 cm)
715004481 • 60" (152 cm)
715004482 • 66" (168 cm)

- To help prevent scratches on smooth driveways and markable surfaces.

Can-Am ProMount Curved Wear Blade

G3, G3L

715007791 • 60" (152 cm)
715007792 • 66" (168 cm)
715007793 • 72" (183 cm)

- Wear blade designed with a folded back bottom lip.
- The increased surface allows for less digging while plowing uneven surfaces.
- Ideal for snow covered gravel, grass, paver stone and other soft surfaces.

Back Drag Blade

ProMount Plows (60" and more) | **715007794**

- ¼" thick steel swivel scraper.
- Lifts up when the vehicle is moving forward so as not to affect the scraping.
- Increased capacity to pull snow.
- More aggressive scraping in reverse mode.
- Lifts the blade off the ground so that it scrapes evenly.
- Adjustable in length for compatibility with 60", 66" and 72" blades.
- Compatible with ProMount blades (Flex and Steel).

Plow Roller Fairlead

G3, G3L | **705009222**

- Larger diameter lower roller reduces wear on wire rope for plow application.
- Can be used with all ProMount plows.
- Included in the Can-Am ProMount Mounting Kit (715009483).

Pulley Kit for Alpine Super-Duty Plow

G3, G3L | **715000279**

- Pulley kit to be used in conjunction with the winch when using a snow plow.
- Recommended to increase winch efficiency.
- To be used with the XT Front Bumper.

Plow Limit Switch
(Not illustrated)

G3, G3L | **715006319**

- To control the cable tension when raising your plow system.
- Prevents winch, plow push frame and vehicle damage.

Synthetic Winch Cable for Plowing

715000540

- Specially designed for plowing applications.
- 8' (2.4 m) section of durable, extra-strong synthetic rope.
- Stands up to repeated, sharp angle pulls used to lift heavy plow blades.
- Temporarily replace your winch rope for plow season to save wear and tear on wire rope.

OUTLANDER

PARTS AND MAINTENANCE

PARTS AND MAINTENANCE

Keep an Eye on These Parts	95
How to use the EPC	97
Air Filters	98
Oil Filters	98
Spark Plugs	98
Batteries	98
D.E.S.S. Keys	99
Removable Passenger Seat Conversion and LinQ Seat Anchorage	99
Axles	100
Ball Joints	102
Brakes	102
PDrive Maintenance Kits	102
Drive belts	103
XPS Tires	104
Tires & Wheel Specifications Chart	105
Wheel Hardware	105
Lubricant & Oil Change Kit	106
Oil Change Kit	106
Coolants	107
Maintenance Products	107

CAN-AM ATVs – G2, G2L, G2S

To make sure your ATV performs as you expect, **keep an eye on these components.**[**]

OIL FILTER		420256188
ENGINE OIL*		
4T 10W-50 Synthetic Oil	1 quart / 946 ml	9779234
	1 US gallon / 3.785 L	9779235
4T 0W-40 Synthetic Oil	1 quart / 946 ml	9779139
	1 US gallon / 3.785 L	9779140
4t 5W-40 Full Synthetic Oil	1 quart / 946 ml	9779492
	1 US gallon / 3.785 L	9779493
OIL CHANGE KIT*		
5W-40 Synthetic Oil	500 cc or more V-twin engine	9779488
0W-40 Synthetic Oil	500 cc or more V-twin engine	9779259
10W-50 Synthetic Oil	500 cc or more V-twin engine	9779252
5W-40 Synthetic Oil	450 cc or less	9779487
0W-40 Synthetic Oil	450 cc or less	9779257
EMISSION CONTROL		
Fuel Tank Vent Breather Filter	Non EVAP models	709001120
Canister Vent Pre-filter	CARB and EVAP models	709001109
AIR FILTER		
Performance Air Filter by Twin Air†		715001333
Premium Air Filter		707800371
CVT AIR FILTER		
G2S		707001786
G2, G2L		715003483
DRIVE BELT		
450 cc		422280283
500 cc & more		422280366

BRAKE PADS		
Front Left	Metallic G2, G2L, G2S (X mr models)	715900248
Front Right		715900249
Rear Left	Metallic G2, G2L, G2S (X mr models)	715900248
Rear Right		715900249
Front Left	Organic G2, G2L, G2S (except X mr)	705601015
Front Right		705601014
Rear Left	Organic G2, G2L, G2S (except X mr)	—
Rear Right		705601014

*Each kit includes 2 pads.

CV BOOT KITS		
Front Wheel Side	G2 (except X mr), G2S, G2L X mr	705401345
Front Diff Side	G2 (except X mr), G2S, G2L X mr	705401346
Front Wheel Side	G2 X mr & G2S X mr	705401354
Front Diff Side	G2 X mr & G2S X mr	705401355
Front Wheel Side	G2L (except X mr), 2016–2018 G2 Base, DPS & XT 570	715900298
Front Diff Side	G2L (except X mr), 2016–2018 G2 Base, DPS & XT 570	715900299
Rear Wheel & Diff Side	G2, G2S, G2L X mr & 6x6	705501864
Rear Wheel Side	G2L (except X mr)	705401345
Rear Diff Side	G2L (except X mr)	705401346
WHEEL BEARINGS		293350150
FRONT A-ARM BUSHING KIT		703500875
BALL JOINTS		
Lower		703501262
Upper		703501264
SPARK PLUG		
450, 850, 1000R engines		715900352
570, 650, 1000 engines		715900642
BATTERY		
18 Ah Yuasa YTX20L, fact. activated		410301203

*For Europe, please check the correspondent PNs on page 106.
**Refer to periodic maintenance chart for proper intervals.

CAN-AM ATVS — G3, G3L

To make sure your ATV performs as you expect, **keep an eye on these components.****

OIL FILTER		420256188
OIL FILTER COVER O-RING		420230922
DRAIN PLUG SEALING RING		420552280
ENGINE OIL*		
4T 10W-50 Synthetic Oil	1 quart / 946 ml	9779234
	1 US gallon / 3.785 L	9779235
4T 0W-40 Synthetic Oil	1 quart / 946 ml	9779139
	1 US gallon / 3.785 L	9779140
4T 5W-40 Full Synthetic Oil	1 quart / 946 ml	9779492
	1 US gallon / 3.785 L	9779493
OIL CHANGE KIT*		
0W-40 Synthetic Oil	ACE 650 cc Single cylinder	9779481
5W-40 Synthetic Oil	ACE 650 cc Single cylinder	9779480
10W-50 Synthetic Oil	500 cc or more V-twin engine	9779252
0W-40 Synthetic Oil	500 cc or more V-twin engine	9779259
5W-40 Synthetic Oil	500 cc or more V-twin engine	9779488
EMISSION CONTROL		
Fuel Tank Vent Breather Filter	Non EVAP models	709001120
Canister Vent Pre-filter	CARB and EVAP models	709001109
AIR FILTER		
G3		703501249
G3L		703501247
DRIVE BELT		
G3L 500 cc		422280226
G3, G3L 700 cc and more		422280225
PDRIVE MAINTENANCE KITS		
Torque Rollers Maintenance Kit		861805587
Ramp Rollers Maintenance Kit		861805586

BRAKE PADS		
Front Left & Right	Semi-Metallic G3 1000R, G3 850 X mr	705602167*
Rear Left & Right		705602167*
Front Left & Right	Semi-Metallic G3 850 (except X mr), G3L	705602167*
Rear Right		705602168**

*Kit includes 4 pads, pin set and retaining springs
**Kit includes 2 pads, pin set and retaining spring

CV BOOT KITS		
Front Wheel Side	G3 850 except X mr G3L - all packages	715500559
Front Diff Side	G3 850 except X mr G3L - all packages	715500560
Rear Wheel Side	G3 850 except X mr G3L - all packages	715500561
Rear Diff Side	G3 850 except X mr G3L - all packages	715500562
Front Wheel Side	G3 1000R except X mr & Backcountry	715500561
Front Diff Side	G3 1000R except X mr & Backcountry	715500563
Rear Wheel Side	G3 1000R, all packages	715500564
Rear Diff Side	G3 1000R, all packages	715500565
Front Wheel Side	X mr 850 & 1000R Backcountry 1000R	715500566
Front Diff Side	X mr 850 & 1000R Backcountry 1000R	715500567
WHEEL BEARINGS		293350150
BALL JOINTS		
Lower		703501262
Upper		703501264
SPARK PLUG		715900785
BATTERY		
20 Ah, fact. activated	G3	715900973
18 Ah Yuasa YTX20L Fact. activated	G3L	410301203

*For Europe, please check the correspondent PNs on page 106.
**Refer to periodic maintenance chart for proper intervals.

ELECTRONIC PARTS CATALOG (EPC)

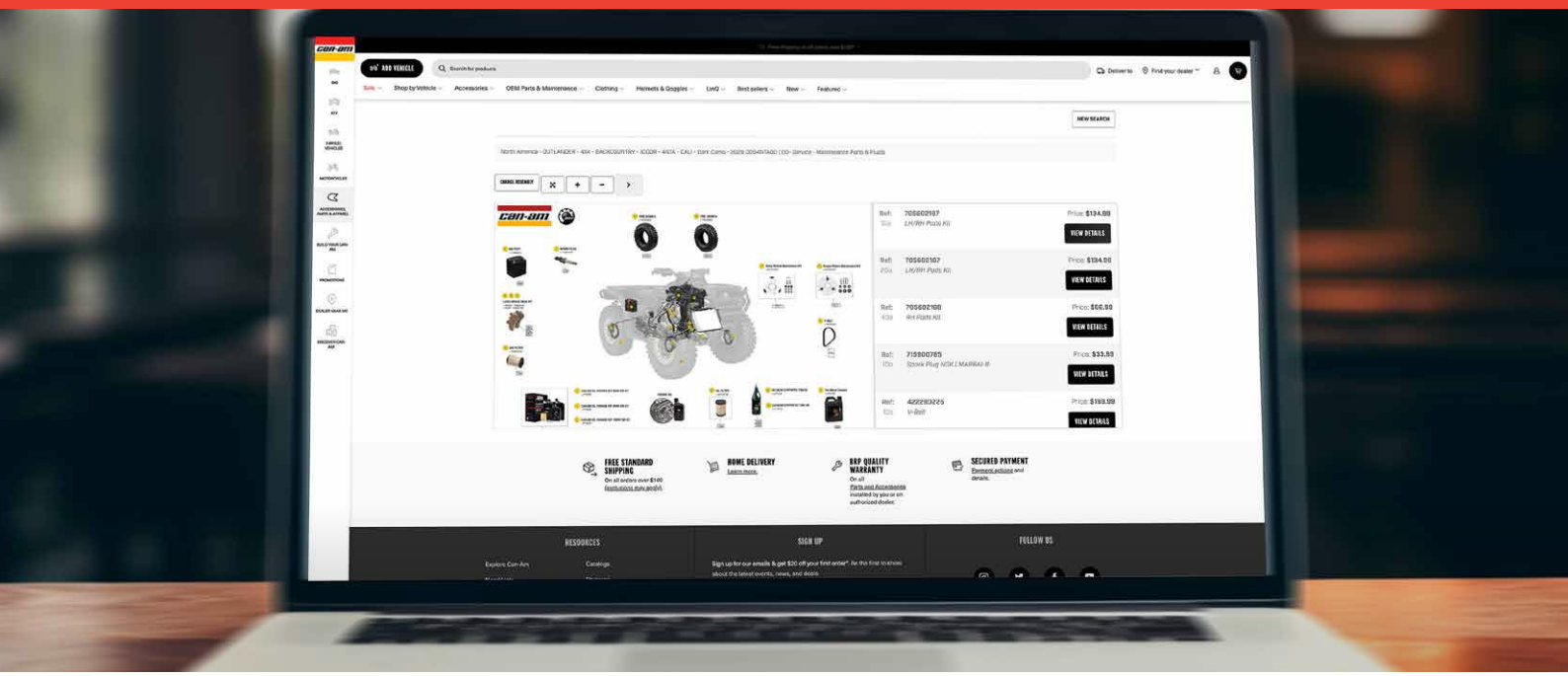

IT'S THE GO-TO RESOURCE FOR QUICKLY LOCATING, IDENTIFYING AND ORDERING EXACT-FIT CAN-AM GENUINE PARTS. TO HELP YOU SAVE EVEN MORE TIME, ALL FAST-MOVING MAINTENANCE AND WEAR PARTS ARE NOW GROUPED ON THE FIRST PAGE OF EACH MODEL.

3 SIMPLE STEPS TO FIND THE RIGHT PART

1. Select the exact vehicle model.
2. Choose the vehicle system needing a part.
3. Pick the part and add it to the cart.

SCAN THE QR CODE FOR INSTANT ACCESS TO THE EPC ON ECOM.

AIR FILTERS

Premium Air Filter

- Premium quality filter, built to exact specs to prevent contaminants from reaching your engine and protects internal components against premature wear.
- Features high-density pleated media for maximum dirt-holding capacity, a molded seal for tight fit and durable construction to prevent collapse in extreme conditions.

Models	
G3, all packages, 2025–2027	**703501249**
G3L 2023–2027	**703501247**
G2, G2L, G2S 2011–2027	**707800371**

OIL FILTERS

Oil Filters

- High-quality construction OEM filter that is designed for your Rotax engine.
- Helps protect critical engine components from contaminants.
- Maintains correct oil flow and pressure.

Models	
G2, G2L, G2S, G3 & G3L	**420256188**

SPARK PLUGS

Spark Plugs

Models	
G3, G3L (all engines)	**715900785**
G2, G2L, G2S (450, 850, 1000R)	**715900352**
G2, G2L, G2S (570, 650, 1000)	**715900642**
DS 70/90	**219703175**
DS 250	**219703176**
DS 450	**278002297**
DS 650/Traxter	**707000008**
Renegade 70/110	**A9807639A00A**

BATTERIES

Batteries

Models	Type	Amp-Hours	
G3	Factory activated	20	**715900973**
G3L	Yuasa YTX20L, fact. activated Yuasa YTX20L-BS	18	**410301203** **715901086**
G2, G2L, G2S	Yuasa YTX20L, fact. activated Yuasa YTX20L-BS	18	**410301203** **715901086**
DS 70/90	Factory activated	6	**V31500MAA020**
DS 250	Yuasa YTX12, fact. activated Yuasa YTX12-BS	10	**715900710** **715901083**
DS 450	Yuasa YT7B-BS Yuasa YTX7B-BS	6.5	**715500305** **715901083**
Renegade 70/110	Factory activated	6	**V31500MAA020**

D.E.S.S. KEYS

RF D.E.S.S.™ Keys

G2, G2L (2017–2026), G3, G3L (2024 and up), Outlander EV (2026 and up)

710004964 • Grey
710005232 • Green

- Each key communicates wirelessly with the vehicle using a unique encrypted code. The engine is designed to start only when the key and vehicle code match.
- All RF D.E.S.S.™ keys are fully programmable and support multiple speed and torque profiles (based on vehicle options). This allows precise control tailored to the rider or the riding environment.
- Different programming levels help first-time users learn progressively while building confidence and control.
- Available color options make it easy to distinguish between programmed keys at a glance.
- Keeping a spare key helps prevent unnecessary costs or delays if the original is lost, and adds convenience when multiple people use the vehicle.

REMOVABLE PASSENGER SEAT CONVERSION AND LinQ SEAT ANCHORAGE

NEW Seat Conversion Kit

G3L, all 2024–2026 MAX packages with fixed 1+1 seat

703501301

- Converts G3L 1+1 Max Seat to the G3 / G3L Pro 2 piece removable design.
- Includes driver seat, removable passenger seat, LinQ seat anchorage and hardware.

NEW LinQ Seat Anchorage

G3, all 2025–2026 MAX packages

703501302

- Converts seat anchorage to allow for LinQ attached accessories.
- Includes LinQ seat anchorage with hardware.

HOLD THE POWER. TAKE THE HIT.

Axles act as pressure points in the power system, absorbing stress to help protect more complex and costly components. No weak links. Just smart engineering.

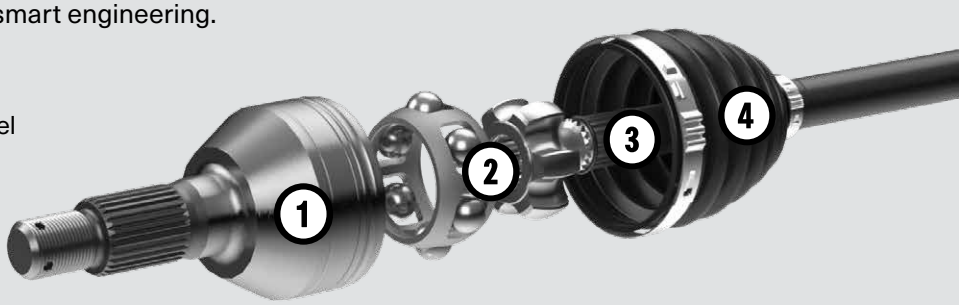

1 THE FIXED JOINT

Forged from high-grade, heat-treated steel with polished internal surfaces, the Fixed Joint delivers exceptional strength, durability and long-lasting fatigue resistance.

2 THE CAGE, STAR & BEARING BALLS

Engineered to OEM-level tolerances with polished finishes and smooth radii, the Cage, Star & Bearing Balls minimize stress and friction to deliver superior strength and fatigue life and reduced NVH.

3 THE BAR SHAFT

Made from heat-treated alloy steel and precision-engineered to exact torsional strength specs, the bar shaft delivers the ideal balance of strength and stress absorption to protect critical drivetrain components.

4 THE CV BOOTS

Made from puncture, wear and temperature resistant TPE, a polymer offering far greater durability than a rubber counterpart, and sealed with high quality, low-profile Oetiker clamps. Premium extreme temperature grease reduces friction and protects joints subjected to high mechanical and thermal loads.

AXLES

	Model / Package / Engine*	Years	Front				Rear			
			Right Axle	Left Axle	Boot (diff. side)	Boot (wheel side)	Right Axle	Left Axle	Boot (diff. side)	Boot (wheel side)
G3L										
Base / DPS / XT / Pro (incl. MAX models)	Base & DPS 500 Pro & Pro XU HD5 Base, DPS & XT 700 Pro & Pro XU HD7	2023–2024	705404311	705404312	715500560	715500559	705502928		715500562	715500561
	Base & DPS 500 Pro & Pro XU HD5 Base, DPS & XT 700 Pro & Pro XU HD7	2025–2027	705404311	705404312	715500560	715500559	705504142		715500562	715500561
XMR	XMR 700	2023–2024	705404311	705404312	715500560	715500559	705502928		715500562	715500561
	XMR 700	2025–2027	705404311	705404312	715500560	715500559	705504142		715500562	715500561
EV	Electric	2026–2027	705404311	705404312	715500560	715500559	705504142		715500562	715500561
6X6							2nd (middle)	3rd (rear)		
	6x6 DPS 700	2026–2027	705404311	705404312	715500560	715500559	705504142		715500562	715500561
G3										
DPS / XT / XTP / LTD (incl. MAX models)	DPS 1000 DPS 1000R	2025–2027	705404301	705404302	715500563	715500561	705504144		715500565	715500564
	XT 1000 XT 1000R	2025–2027	705404301	705404302	715500563	715500561	705504144		715500565	715500564
	XTP 1000 XTP 1000R	2025–2027	705404301	705404302	715500563	715500561	705504144		715500565	715500564
	LTD 1000 LTD 1000R	2025–2027	705404301	705404302	715500563	715500561	705504144		715500565	715500564
XMR	XMR 850 XMR 1000 & 1000R Backcountry 1000R	2025–2027	705404305	705404306	715500567	715500566	705504146		715500565	715500564
Base / DPS / XT (incl. MAX)	Base, DPS & XT 850	2025–2027	705404307	705404308	715500560	715500559	705504142		715500562	715500561
6x6 (incl. MAX)							2nd (middle)	3rd (rear)		
	6x6 Backcountry 1000R	2026–2027	705404305	705404306	715500567	715500566	705504146	705504146	715500565	715500564
	6x6 DPS 850	2026–2027	705404307	705404308	715500560	715500559	705504142	705504142	715500562	715500561

*Includes MAX models unless otherwise specified.

AXLES

	Model / Package / Engine*	Years	Front				Rear			
			Right Axle	Left Axle	Boot (diff. side)	Boot (wheel side)	Right Axle	Left Axle	Boot (diff. side)	Boot (wheel side)
G2L										
Base / DPS / XT / STD+ / Mossy Oak (incl. MAX models)	Base 450 DPS 450	2015–2023	705401428	705401429	715900299	715900298	705501897	705501898	705401346	705401345
	Mossy Oak 450	2021–2023	705401428	705401429	715900299	715900298	705501897	705501898	705401346	705401345
	STD+ 450	2022	705401428	705401429	715900299	715900298	705501897	705501898	705401346	705401345
	Base 500 DPS 500	2015	705401428	705401429	715900299	715900298	705501897	705501898	705401346	705401345
	Base 570 DPS 570	2016–2023	705401428	705401429	715900299	715900298	705501897	705501898	705401346	705401345
	Mossy Oak 570	2016–2023	705401428	705401429	715900299	715900298	705501897	705501898	705401346	705401345
	XT 570	2017–2023	705401428	705401429	715900299	715900298	705501897	705501898	705401346	705401345
	STD+ 570	2022	705401428	705401429	715900299	715900298	705501897	705501898	705401346	705401345
XMR/MR	XMR 570	2016–2023	705401116	705401115	705401346	705401345	705501486	705501485	705501864	705501864
	MR 570	2022–2023	705401116	705401115	705401346	705401345	705501486	705501485	705501864	705501864
6x6 (incl. MAX models)							Right 2nd	Left 2nd		
	6x6 DPS 450	2019–2024	705401428	705401429	715900299	715900298	705501897	705501898	705401346	705401345
							Right 3rd	Left 3rd		
							705501898	705501897		
G2 / G2S										
Base / DPS / XT / XXC / XTP / LTD / Mossy Oak / Winter (incl. MAX models)	Base, DPS, XT 650	2015–2018	705401116	705401115	705401346	705401345	705501486	705501485	705501864	705501864
	Base, DPS, XT, XXC & XTP 800R	2015	705401116	705401115	705401346	705401345	705501486	705501485	705501864	705501864
	Base, DPS, XT, XXC, XTP & LTD 1000	2015–2018	705401116	705401115	705401346	705401345	705501486	705501485	705501864	705501864
	Base, DPS, XT, XXC & XTP 850	2016–2018	705401116	705401115	705401346	705401345	705501486	705501485	705501864	705501864
	Mossy Oak 850	2017	705401116	705401115	705401346	705401345	705501486	705501485	705501864	705501864
	Mossy Oak 1000R	2017–2018	705401116	705401115	705401346	705401345	705501486	705501485	705501864	705501864
	Winter Edition 650	2018	705401116	705401115	705401346	705401345	705501486	705501485	705501864	705501864
	Winter Edition 850	2018	705401116	705401115	705401346	705401345	705501486	705501485	705501864	705501864
Base / DPS / XT (incl. MAX models)	Base, DPS & XT 500	2015	705401428	705401429	715900299	715900298	705501486	705501485	705501864	705501864
	DPS & XT 570	2016	705401428	705401429	715900299	715900298	705501486	705501485	705501864	705501864
	Base 570	2016–2018	705401428	705401429	715900299	715900298	705501486	705501485	705501864	705501864
	DPS & XT 570	2018	705401428	705401429	715900299	715900298	705501486	705501485	705501864	705501864
XMR	XMR 650	2015–2018	705401703	705401704	705401355	705401354	705501848	705501847	705501864	705501864
	XMR 800R	2015	705401703	705401704	705401355	705401354	705501848	705501847	705501864	705501864
	XMR 1000	2015	705401703	705401704	705401355	705401354	705501848	705501847	705501864	705501864
	XMR 1000R	2016–2018	705401703	705401704	705401355	705401354	705501848	705501847	705501864	705501864
	XMR 650	2019–2026	705402238	705403009	705401355	705401354	705503024	705503025	705501864	705501864
	XMR 850	2019–2024	705402238	705403009	705401355	705401354	705503024	705503025	705501864	705501864
	XMR 1000R	2019–2026	705402238	705403009	705401355	705401354	705503024	705503025	705501864	705501864
Base / DPS / XT / XTP / XXC / XMR / Winter, North, Mossy Oak & Hunting Editions (incl. MAX)	Renegade 570	2019–2022	705402236	705402235	705401346	705401345	705502711	705502710	705501864	705501864
	Renegade XMR 570	2019–2021	705402236	705402235	705401346	705401345	705502711	705502710	705501864	705501864
	DPS & XT 650	2019–2022	705402236	705402235	705401346	705401345	705502711	705502710	705501864	705501864
	Base 650	2019–2025	705402236	705402235	705401346	705401345	705502711	705502710	705501864	705501864
	Winter Edition 650	2019	705402236	705402235	705401346	705401345	705502711	705502710	705501864	705501864
	Mossy Oak 650	2020–2022	705402236	705402235	705401346	705401345	705502711	705502710	705501864	705501864
	Winter Edition 850	2019	705402236	705402235	705401346	705401345	705502711	705502710	705501864	705501864
	XXC 850	2019–2022	705402236	705402235	705401346	705401345	705502711	705502710	705501864	705501864
	Base, DPS, XT, XTP 850	2019–2024	705402236	705402235	705401346	705401345	705502711	705502710	705501864	705501864
	North Edition 850	2020–2021	705402236	705402235	705401346	705401345	705502711	705502710	705501864	705501864
	Hunting Edition 850	2023–2024	705402236	705402235	705401346	705401345	705502711	705502710	705501864	705501864
	Base & DPS 1000R	2019	705402236	705402235	705401346	705401345	705502711	705502710	705501864	705501864
	Mossy Oak 1000R	2019	705402236	705402235	705401346	705401345	705502711	705502710	705501864	705501864
	XT, XTP & LTD 1000R	2019–2024	705402236	705402235	705401346	705401345	705502711	705502710	705501864	705501864
	XXC 1000R	2019–2026	705402236	705402235	705401346	705401345	705502711	705502710	705501864	705501864
6x6 (incl. MAX models)							Right 2nd	Left 2nd		
	6x6 XT 650	2015–2016	705401116	705401115	705401346	705401345	705501486	705501485	705501864	705501864
	6x6 DPS 650	2017–2018	705401116	705401115	705401346	705401345	705501486	705501485	705501864	705501864
	6x6 XT 1000	2015–2018	705401116	705401115	705401346	705401345	705501486	705501485	705501864	705501864
	6x6 DPS 650	2019–2025	705402236	705402235	705401346	705401345	705502711	705502710	705501864	705501864
	6x6 XT 1000	2019–2025	705402236	705402235	705401346	705401345	705502711	705502710	705501864	705501864
							Right 3rd	Left 3rd		
	6x6 XT 650						705501485	705501486		
	6x6 DPS 650						705501485	705501486		
	6x6 XT 1000						705501485	705501486		
	6x6 DPS 650						705502710	705502711		
	6x6 XT 1000						705502710	705502711		

*Includes MAX models unless otherwise specified.

BALL JOINTS

Suspension Arm Ball Joint with Hardware	**Upper** All models & packages 2015–2027	**703501264**
	Lower All models & packages 2015–2027	**703501262**

- Robust design for off-road usage and sealed for prolonged durability.
- Built to absorb punishing hits and to deliver maximum articulation without binding.

BRAKES

Brake Pad Kits
(Not illustrated)

- Organic brake pads offered standard on our G2 platforms (excl. X mr) provide smooth, quiet and exceptional braking performance in light duty conditions. Kits include pads only.
- Metallic brake pads offered standard on our G2 X mr provide increased robustness and longer life span when vehicle is used in severe conditions. Kits include pads only.
- Semi-metallic brake pads offered standard on our G3 platforms provide the best balance between smoothness and performance. Kits include pads, pins and springs.

		Front		Rear	
Models	**Compound**	**Left**	**Right**	**Left**	**Right**
G2, G2L, G2S (except X mr)	Organic	**705601015**	**705601014**	—	**705601014**
G2, G2L, G2S (X mr models)	Metallic	**715900248**	**715900249**	**715900248**	**715900249**
G3 1000R, G3 850 X mr	Semi-metallic	**705602167**		**705602167**	
G3 850 (except X mr), G3L	Semi-metallic	**705602167**		—	**705602168**

PDRIVE MAINTENANCE KITS

pDrive Maintenance Kits	**Models**	**Torque Rollers Maintenance Kit**		**Ramp Rollers Maintenance Kit**
861805587 861805586	All G3 Outlanders	**861805587**	**169.99**	**861805586**

DESIGNED TO PERFORM. PROVEN TO WIN.

From dyno to desert, BRP drive belts are tested in brutal real-world and race conditions.

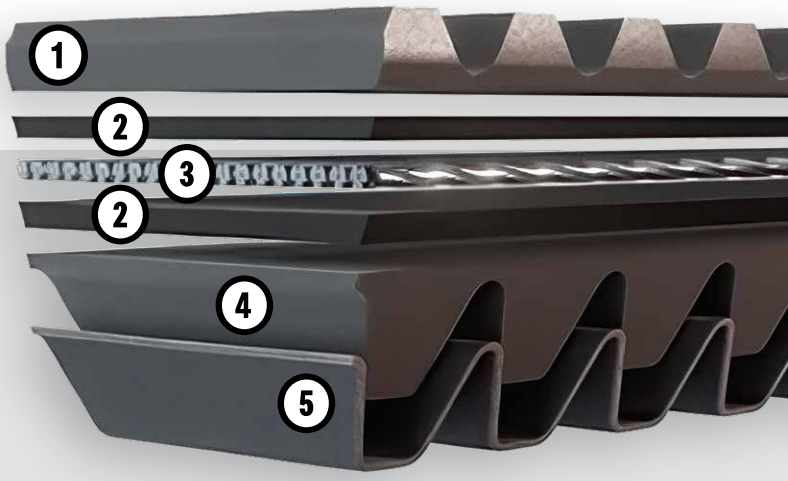

1

THE TOP COG

Engineered for durability and precision. Made from a specialized compound distinct from the lower cog to optimize power transfer and reduce distortion under extreme loads.

2

ADHESION LAYERS

Reliable, seamless integration. Advanced adhesion layers ensure strong bonding of **both cogs to the tensile cord**, delivering consistent performance and extended belt life.

3

THE TENSILE CORD

Unmatched strength and flexibility. High-performance aramid cords provide superior tensile strength and precise load distribution, tailored to your machine's power requirements.

4

THE LOWER COG

Optimized for power and control. A proprietary blend of premium rubbers delivers perfect flexibility for smooth clutch engagement and maximum torque transfer.

5

IMPREGNATED FABRIC

Built to last. Reinforced fabric layer enhances abrasion resistance, protecting both the belt and clutch components for longer service life.

DRIVE BELTS

Drive Belt

- High-performance design ideal for off-road use.
- BRP-specific calibration adjusted to best suit your Can-Am vehicle.

Models	CVT Drive Belt
G3L (500 cc)	**422280226**
G3, G3L (700 cc and more)	**422280225**
G2, G2L, G2S (450 cc)	**422280283**
G2, G2L, G2S (500 cc and more)	**422280366**
DS70/90	**V23100CJF020**
DS250	**S23100RB1000**
Renegade 70/110	**A2310018S000**

XPS TIRES

SHOP BY USAGE

GRAVEL & HARD PACK | ROCK | MUD

XPS Recon Force

- Utility inspired tire.
- Shallow depth tread designed to handle hard pack terrain, increasing tread life.
- Tight tread pattern to offer a smooth ride and minimal ground disturbance without compromising performance.
- Designed for efficiency.
- Tread depth: 15 mm (0.6").
- E-marked.

705403520 • 26X8R14
705503616 • 26X10R14

XPS Iron Force

- 6-ply rated construction.
- Multiple crown radius setup made to look square, reduce steering feedback and enhance grip and tire cornering.
- Tread depth: 16 mm (0.6").
- E-marked.

705403823 • 30X9R14

XPS Trail Force

- All-terrain radial tire.
- 6-ply rated construction.
- Versatile and suitable for many types of terrain.
- Aggressive tread pattern for better traction on dirt, mud and rocky terrains.
- Tread depth: 20 mm (0.78").
- E-marked.

705403026 • 26X8R14
705503851 • 26X10R14

XPS Trail King

- All-terrain radial tire.
- 6-ply rated construction.
- Aggressive tread pattern for tougher terrains.
- An almost continuous center tread offers a smoother trail ride.
- Tread depth: 22 mm (0.90").
- E-marked.

705402713 • 26X8R12
705503073 • 26X10R12
705403464 • 27X8R14
705503579 • 27X10R14
705403730 • 28X8R14
705503813 • 28X10R14

XPS Trail King 2

- All-terrain radial tire.
- 6-ply rated construction.
- Tire excels in various terrains from loose to hard packed.
- Non-directional tread pattern with optimized construction providing precision handling and ensuring maximum grip and low rolling resistance.
- Tread depth: 20 mm (0.8").
- E-marked.

705403398 • 26X8R14
705503518 • 26X10R14
705403397 • 27X8R14
705503517 • 27X10R14

XPS Swamp King

- Bias tires for mud and trail.
- 6-ply rated construction.
- Ultimate performance in mud without sacrificing good trail handling.
- Tread depth: 38 mm (1.49").
- E-marked.

705403674 • 28X8X14
705503762 • 28X10X14

XPS Swamp King XL

- Bias ply for mud and trail.
- 6-ply rated construction.
- Our best performing mud tire that does not compromise your trail riding.
- Deep V grooved lugs with extended shoulder tread for max traction in deep ruts that also help eject mud faster.
- Tread depth: 38 mm (1.49") center, max depth 52 mm (2.05").
- E-marked.

705403381 • 30X9X14
705503687 • 30X10X14

TIRES & WHEEL SPECIFICATIONS CHART

Bolt Pattern: 4 x 136 mm, Studs: M10

Model / Package	Engine	Position	Wheel PN	Wheel Size	Offset (mm)	Wheel Type	Tire Size	Tire Name	Tire PN	Beadlock PN	Assembled wheel PN
Outlander 850/1000R											
Backcountry	1000R	Front	705404020	14X6.5	41.2	Beadlock Black	30X9R14	Iron Force	705403823	705404006	705403824
		Rear	705404024	14X6.5	31.2		30X9R14	Iron Force	705403823		705503885
DPS	850 1000R	Front	705403136	12X6	41.2	Std Black	26X8X12	Pinacle	705403788		
		Rear	705503375	12X7.5	51.2		26X10X12	Pinacle	705503835		
Limited MAX	1000R	Front	705404022	14X6.5	41.2	Std Liquid Titan	27X8X14	Trail King 2	705403397		
		Rear	705504026	14X8.5	51.2		27X10X14	Trail King 2	705503517		
XMR	850 1000R	Front	705404022	14X6.5	41.2	Std Liquid Titan	30X9X14	Swamp King XL	705404012		
		Rear	705504026	14X8.5	51.2		30X10X14	Swamp King XL	705504018		
XT	850 1000R	Front	705404021	14X6.5	41.2	Std Machined	26X8X14	Trail King 2	705403398		
		Rear	705504025	14X8.5	51.2		26X10X14	Trail King 2	705503518		
XT	850 1000R	Front	705404023	14X6.5	41.2	Std Black	26X8X14	Trail King 2	705403398		
		Rear	705504024	14X8.5	51.2		26X10X14	Trail King 2	705503518		
XTP	1000R	Front	705404020	14X6.5	41.2	Beadlock Black	27X8X14	Trail King 2	705403397	705404006	
		Rear	705504027	14X8	51.2		27X10X14	Trail King 2	705503517		
Outlander 500/700											
2WD Base, DPS	500 700	Front	705403534	12X6	41.2	Std Black	25X8X12	Pinacle	705403787		
		Rear	705503634	12X7.5	51.2		25X10X12	Pinacle	705503834		
XMR	700	Front	705404163	14X6.5	41.2	Std Black	28X8X14	Swamp King	705403674		
		Rear	705504083	14X6.5	51.2		28X10X14	Swamp King	705503762		
XT	700	Front	705404163	14X6.5	41.2	Std Black	26X8X14	Trail Force	705403800		
		Rear	705504083	14X6.5	51.2		26X10X14	Trail Force	705503851		
Outlander 6X6											
Backcountry	1000R	Front	705404020	14X6.5	41.2	Beadlock Black	30X9X14	Iron Force	705403823	705404006	705403824
		Rear	705404024	14X6.5	31.2		30X9X14	Iron Force	705403823		705503885
DPS	700	Front	705403534	12X6	41.2	Std Black	26X8X12	Trail King	705402713		
		Rear	705503634	12X7.5	51.2		26X10X12	Trail King	705503073		
DPS	850	Front	705404023	14X6.5	41.2	Std Black	28X8X14	Trail King	705403730		
		Rear	705504024	14X8.5	51.2		28X10X14	Trail King	705503813		
Outlander PRO											
Base	HD5 HD7	Front	705403534	12X6	41.2	Std Black	26X8X12	Pinacle	705403788		
		Rear	705503634	12X7.5	51.2		26X10X12	Pinacle	705503835		
Hunting, XU	HD5 HD7	Front	705403136	12X6	41.2	Std Black	26X8X12	Trail King	705402713		
		Rear	705503375	12X7.5	51.2		26X10X12	Trail King	705503073		
Outlander Electric											
All	All	Front	705403507	14X6.5	41.2	Std Black	26X8X14	Recon Force	705403520		
		Rear	705503614	14X8.5	51.2		26X10X14	Recon Force	705503616		
Renegade											
XC	850	Front	705403136	12X6	41.2	Std Black	25X8X12	Conquer XC	705403983		
		Rear	705503375	12X7.5	51.2		25X10X12	Conquer XC	705503991		
XMR	1000R	Front	705404022	14X6.5	41.2	Std Liquid Titan	30X9X14	Swamp King XL	705404012		
		Rear	705504026	14X8.5	51.2		30X10X14	Swamp King XL	705504018		
XXC	1000R	Front	705404020	14X6.5	41.2	Beadlock Black	26X8X14	Conquer XC	705403984	705404006	
		Rear	705504027	14X8	51.2		26X10X14	Conquer XC	705503992		

WHEEL HARDWARE

Lug Nuts

Description	Length	PN
M10X1.25/Zinc	0.55" (15 mm)	**250100042**
M10X1.25/Black	1.06" (28 mm)	**250100184**

Wheel caps

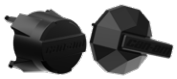

PN
705400928
705403497

Weights

Description	PN
Weight Strip 8 X 0.5 oz	**219704628**

Beadlock rings

Color	PN
Orange Crush	**705404004**
Deep Black	**705404006**

Beadlock screws

Description	PN
M6X25/Black	**250000787**

Valve assemblies

(includes valve, core and cap)

Description	PN
TR-413 Valve	**705402595**

LUBRICANT & OIL CHANGE KIT

LUBRICANT

XPS 4T 10W-50 Synthetic Oil

+50˚C
+122˚F
-25˚C
-13˚F

- Engineered for heavy-duty and high-performance 4-stroke engines, including turbocharged, supercharged and racing engines.
- Formulated using carefully selected and strenuously tested base stocks and custom additives.
- Offers thick film strength to protect bearings and a proven high-temp detergency to minimize deposits, prevent shear, provide thermal stability and combat fuel dilution to ensure maximum performance from your engine.

9779234 (US), **9779240** (EU) • 1 qt / 946 ml
9779235 (US & EU) • 3.785 L
9779236 (US & EU) • 5 gal /18.92 L
9779237 (US & EU) • 55 gal / 205 L

XPS 4T 0W-40 Synthetic Oil

+40˚C
+104˚F
-45˚C
-49˚F

- Powersport formula with premium anti-wear and anti-corrosion additives.
- The best choice for high-performance snowmobile, ATV and SXS 4-stroke engines used in cold weather.
- Provides superior engine and transmission protection against heat, rust and corrosion.
- Delivers optimal performance in high and low temperatures.

9779139 (US), **9779286** (EU) • 1 qt / 946 ml
9779149 (US), **9779287** (EU) • 3.785 L
9779141 (US & EU) • 5 gal / 18.92 L
9779142 (US & EU) • 55 gal / 205 L
9779143 (US) • 265 gal / 1,003 L
9779144 (US) • 330 gal / 1,249 L

XPS 4T 5W-40 Synthetic Oil

+40˚C
+104˚F
-35˚C
-31˚F

- Off-road formula with premium anti-wear and anti-corrosion additives.
- Designed for high-performance off-road, on-road and PWC 4-stroke engines, including turbo or supercharged powersports engines.
- Provides superior engine and transmission protection against rust and corrosion, even in extreme conditions.

9779492 (US), **9779900** (EU) • 1 qt / 946 ml
9779493 (US),**9779901** (EU) • 3.785 L
9779494 (US & EU) • 5 gal / 18.92 L
9779495 (US & EU) • 55 gal / 205 L
9779496 (US) • 265 gal / 1,003 L
9779497 (US) • 330 gal / 1,249 L

OIL CHANGE KIT

Engine Oil Change Kit

Models	Product	
Rotax® 450 cc or Less Engine	4T 5W-40 Synthetic Oil Change Kit	**9779487** (US) **9779954** (EU)
Rotax® 450 cc or Less Engine	4T 0W40 Synthetic Oil Change Kit	**9779257** (US) **9779409** (EU)
ACE 650 cc Single Cylinder Engine	4T 5W-40 Synthetic Oil Change Kit	**9779480** (US) **9779952** (EU)
ACE 650 cc Single Cylinder Engine	4T 0W-40 Synthetic Oil Change Kit	**9779481** (US) **9779417** (EU)
Rotax® 500 cc or More V-Twin Engine	4T 5W-40 Synthetic Oil Change Kit	**9779488** (US) **9779953** (EU)
Rotax® 500 cc or More V-Twin Engine	4T 0W-40 Synthetic Oil Change Kit	**9779259** (US) **9779406** (EU)
Rotax® 500 cc or More V-Twin Engine	4T 10W-50 Synthetic Oil Change Kit	**9779252** (US) **9779401** (EU)

- Ultra-convenient “all-in-one” Engine Oil Change Kit saves time and money.
- Includes XPS Synthetic Oil, Oil Filter, O-Rings and Washer.

COOLANTS

NEW Cool-X LT Pre-Mixed Lifetime Coolant

- Silicate-Free Powersports Formulation.
- Engineered for high-RPM, high power, high heat BRP powersports engines.
- Controls extreme temperatures from cold start to redline.
- Pre-mixed with high purity water and ready to use.

9779730 (US), **9779920** (EU) • 1 qt / 946ml
9779732 (US) • 1 gal / 3.78L
9779731 (US), **9779921** (EU) • 5.28 gal / 20 L

MAINTENANCE PRODUCTS

Synthetic Gear Oil

75W-90	**9779158** (US) , **9779212** (EU) • 1 qt / 946 ml
75W-140	**9779160** (US), **9779215** (EU) • 1 qt / 946 ml

- Uses custom additives to provide the best performance in Visco-Lok™ and Smart-Lok™ differentials.
- Allows higher loads, superior shear stability and reduced oxidation.
- Exceptional wear protection and superior performance at all operating temperatures.

Anti-Corrosive Lubricant

9779701 (US & EU) **619590733** (Scandinavia) • 14 oz / 400 g

- Multipurpose lubricant that can also be used to prevent rust, corrosion and moisture intrusion.
- It contains extreme pressure additives that work as an all-around lubricant for just about anywhere lubrication is needed.

Extreme Duty Suspension Grease

9779708 (US & EU) • 14 oz / 400 g

- Designed to work specifically with the components found in Can-Am vehicle suspensions.
- It is highly stable and offers optimal lubrication at both extreme cold and high temperatures while protecting suspension components from dirt and moisture, as well as corrosion under extreme washout conditions.

XPS Spline Grease

9779704 (US & EU) • 3 fl oz / 118 ml

- Formulated with molybdenum disulfide and synthetic graphite for maximum durability and long-lasting protection.
- High performance formula that protects against wear, seizure, rust, corrosion and extreme temperatures.
- Ensures smooth assembly and disassembly, with consistent low-friction performance.

DOT 4 Brake Fluid

9779151 (US), **9779207** (EU) • 12 fl oz / 355 ml

- Meets or exceeds all DOT3 and DOT4 brake fluid requirements.
- High-temperature formula resists fade and also conditions seals and O-rings in braking system.

Racing Brake Fluid RS600

9779152 (US & EU) • 12 fl oz / 355 ml

- Exceeds DOT4 brake fluid requirements for extreme conditions and competition use.
- Extreme, 579-degree boiling point temperature is ideal for high-demand competition conditions to combat brake fade.
- Will not harm seals or braking system components.
- Should be added only to a clean/unfilled system to avoid dilution and diminished performance.
- Low-moisture formula slows water vapor absorption through multiple heat cycles.
- Recommended for use in Ski-Doo and Can-Am racing applications.

Fuel Stabilizer

9779171 (US), **9779183** (EU) • 8 fl oz / 236 ml

- Ethanol-compatible and will stabilize fuel in your tank to keep it from breaking down and causing hard starting, throttle hesitation and poor run quality.
- Since ethanol attracts moisture, this product contains powerful anti-corrosion additives to protect fuel system components.
- Prevents problems associated with E10 fuels.

CAN-AM APPAREL

CAN-AM APPAREL

How to Measure 111
Sizing Chart 112
Communication Systems 113
Rayvik Helmets 114
Rayvik Goggles and Helmet Accessories 115
Pyra Helmets 116
Exome Helmets 117
Goggles 119
Mud Gear 119
Rainwear 120
Rally Collection 121
Gloves 122
Bags 123
Can-Am x Fasthouse 124
24.7 x Can-Am Collection 129
Everyday Wear 130
Signature Collection 135
Play and Licensing 139
Replacement Parts 141

HOW TO MEASURE

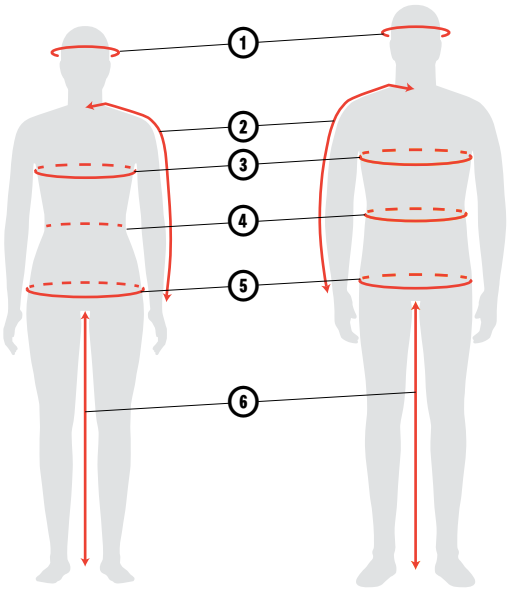

- **For best results, have someone else take measurements.**
- **Measure body in underwear.**
- **Tape must be snug but not tight.**
- **If measurements fall between two sizes, order the larger size.**

1 **HEAD**	Around your head, from the center of the forehead, above the ears and over the natural bump at the back of the head.
2 **ARM LENGTH**	Let the hands hang down on the side in a slightly bent position. Measure from the center of the back of your neck, along the length of your arm, to the wrist.
3 **CHEST/BUST**	Measure under your arms, around the fullest part of your chest.
4 **WAIST**	Measure around your natural waistline, keeping one finger between the tape and body.
5 **HIPS**	Across the widest part of the seat.
6 **INSEAM**	Without shoes, from your crotch to the floor.

DID YOU KNOW?

We redefined our fit for all of our new collections. You now have three categories for our riding gear and sportswear items. You can find the fit of each style in their description so you know what you are getting.

FIT GUIDE

Sportswear

SLIM	REGULAR	RELAXED

Riding Gear

FITTED	REGULAR	RELAXED

What code represents your style?

1 Find your size and color.

2 The corresponding code is THE CODE you use to complete the part number on your order.

Example:
440975 (style number for the Men's Sythe Mesh Jacket CE/UKCA)
06 (sizing code M)
90 (color code Black)

Full SKU:	Style	Size	Color
	440975	06	90

SIZING CODE

Adult		Adult		Adult		Adult		Adult		Adult			
Size	Code	Size	Code	Size	Code	Size	Code	Size	Code	Size	Code	Size	Code
One Size	00	XLT	13	X	26	5	24	13	33	36	40	3–4	79
XS	02	2XL	14	1X	86	6	25	14	34	38	41	5–6	52
S	04	2XLT	15	2X	87	7	27	16	35	40	42	6–8	48
M	06	3XL	16	3X	95	8	28	18	78	42	43	7–8	54
MT	07	3XLT	17	1	20	9	29	28	36			10–12	49
L	09	4XL	18	2	21	10	30	30	37	S / M	72	14–16	50
LT	10	4XLT	19	3	22	11	31	32	38	M / L	91		
XL	12	5XL	88	4	23	12	32	34	39	L / XL	73		

COLOR CODE

Name	Code	Name	Code	Name	Code	Name	Code
Clear	00	Orange	12	Red	30	Denim Blue	79
White	01	Warm Grey	15	Wine	32	Blue	80
Beige	02	Dark Navy	16	Burgundy	35	Navy	89
Sand	03	Lava Red	17	Pink	36	Black	90
Brown	04	Mixed Color	18	Camo	37	Bronze	92
Khaki	05	Smoke 60%	21	Purple	40	Matte Black	93
Charcoal Grey	07	Mirror Silver	22	Deep Purple	42	Black with Graphics	94
Silver	08	Hi-Vis Yellow	26	Smoke	57	Amber	95
Grey	09	Heather Grey	27	Green	70	Ivory	97
Yellow	10	Whiskey	28	Turquoise (Aqua)	76	Chrome	99
Gold	11	Heather Charcoal	29	Army Green	77		

APPAREL AND SPORTSWEAR

MEN'S 170 – 182 CM

	XS	S	M	L	XL	2XL	3XL
Sizing Code	**02**	**04**	**06**	**09**	**12**	**14**	**16**
Chest	81–86	88-92	96–101	107–112	117–122	127–132	137–142
Waist	66–71	74–79	81–86	91–97	101–107	112–117	122–127
Hips (seat)	81–86	88-92	96–101	107–112	117–122	127–132	137–142
Arm length	76	79	81	84	86	89	89
Inseam	79	80	81	81	81	81	81

WOMEN'S 160–176 CM

	XS	S	M	L	XL	2XL	3XL
Sizing Code	**02**	**04**	**06**	**09**	**12**	**14**	**16**
Chest	83–88	88-92	94–99	101–107	112–117	122–127	132–142
Waist	69–74	74–79	79–84	86–91	96–101	107–112	117–127
Hips (seat)	91–97	96–101	101–107	109-114	112–124	122–135	140–150
Arm length	74	76	76	79	79	81	81
Inseam	76	76	76	76	76	76	76

Glove sizing information is available on page 116.

HELMETS

MEN'S & WOMEN'S

	2XS	XS	S	M	L	XL	2XL	3XL
Sizing Code	**01**	**02**	**04**	**06**	**09**	**12**	**14**	**16**
Head (inches)	20⅞–21¼	21⅝–22	22⅜–22¾	23⅛–23⅝	24–24⅜	24¾–25⅛	24¾–25⅛	25½–25⅞
Head (cm)	53–54	55–56	57–58	59–60	61–62	63–64	63–64	65–66

VIBE ON ANY HELMET

The Vibe Communication System delivers unparalleled connectivity and versatility when you ride. Fully compatible with most BRP helmets, this comm system might as well be an extension of the vehicle's ecosystem. This standout lets you chat, listen and ride all day long in comfort no matter how cold it is!

DID YOU KNOW ABOUT VIBE AND THE BRP GO! APP?
Ready, set, go! Set up and manage the Vibe Communication System in no time directly in the free BRP GO! mobile app. You can check the battery level, modify the audio settings and much more!

- ONE CLICK TO CONNECT WITH OTHER MESH RIDERS
- UNPARALLELED TALK TIME UP TO 12 HOURS (8 HOURS AT -18° C)
- SOUND BY HARMAN KARDON®
- OPEN MESH INTERCOM
- UNIVERSAL FIT AND EASY TOOLLESS ASSEMBLY
- FULL COMPATIBILITY WITH MOST HELMETS
- OPEN MESH INTERCOM: LIMITLESS
- MULTI-LANGUAGE VOICE COMMAND
- GROUP MESH INTERCOM: UP TO 24 RIDERS
- INTERCOM UP TO 2 KM / 1.2 MILES IN OPEN TERRAIN

COMMUNICATION SYSTEMS

MISC

Vibe Universal Comm System by BRP

929105 • One size | Matte Black (93)

- VIBE UNIVERSAL Comm System with superior audio quality for every BRP helmets.
- Sound by Harman Kardon®.
- Mesh-only system: Robust reliability compatible with all Sena® Mesh devices.
- Battery capacity: up to 12 hours of talk time (8 hours at 18° C).
- One-click-to-connect simplicity with other mesh riders.
- Mesh Intercom™ features superior audio quality.
- Up to 2 km/1.2 miles in open terrain. Range can be extended with multiple riders.
- Multi-channel protocol in open mesh allows users to switch between nine comm channels.
- Convenience of voice-activated digital assistant access ("OK Google"/"Hey Siri").
- Rapid charging.
- Glove-friendly interface.
- Compatible with all BRP helmets.
- When paired with the BRP GO! app, you can manage many settings such as sound, mesh channel options, software updates, battery level, handlebar control and more.
- Wired and boom microphones included.

For safety reasons, the battery cannot be charged while riding. Considering the increased risks inherent in charging a battery, BRP has chosen NOT to make this action possible to guarantee maximum user safety.

RAYVIK X5 HELMET

Elevate Your Ride

Designed for those who demand both performance and style, the Rayvik helmet is a game-changer in safety, comfort and innovation. Equipped with Mips® technology, offering you enhanced impact protection when you need it most.

- THE Lightest helmet in our product range.
- Equipped with Mips® safety system.
- Multi-density CONTEGO™ copolymer foam for enhanced impact performance.
- Cheek Pads equipped with emergency pull strap.
- Multiple airflow channels to keep you comfortable in all conditions.
- Prescription eyeglasses friendly.
- Micrometric quick-attach chin strap closure.
- Camera mount ready.
- 4-years limited warranty.
- Vibe universal communication system ready.
- Fiberglass composite shell.

LIGHTWEIGHT | ADDED SAFETY FEATURES | DOT/ECE

Mips® Should you have an accident and hit your head, the Mips® system in your helmet is designed to help reduce the rotational motion of certain impacts that may otherwise be transferred to your head.

Can-Am Rayvik X5 Mips® Helmet

DOT ECE22.06

929201 · XS, S, M, L, XL, 2XL, 3XL, 4XL

Grey (09)

Weight from 1,250 g

Rayvik X5 Carbon Mips® Helmet

DOT ECE22.06

929164 · XS, S, M, L, XL, 2XL, 3XL, 4XL

Black (90)

Weight from 1,150 g

Rayvik X5 Mips® Helmet

DOT ECE22.06

929165 · XS, S, M, L, XL, 2XL, 3XL, 4XL

Black (90), Orange (12), Purple (40)

Weight from 1,250 g

RAYVIK GOGGLES AND HELMET ACCESSORIES

UNISEX

Can-Am Rayvik Off-Road Goggles

940012 • One size | Red (30), Yellow (10), Sand (03)

Can-Am Rayvik goggles come with a full mirror-coated lens with superior anti-fog performance.

- 2-part frame composed of rigid and flexible parts provides a better fit for optimal sealing.
- Eyewear-compatible frame cutouts.
- Quick lens change system with locking mechanism.
- 3D formed, 3-layer face foam offers best fit and comfort.
- No-slip silicone strap keeps goggles in place.
- Removable nose guard.
- Compatible with the Rayvik Winter Magnetic Face Guard System (sold separately).

Lens

- Features injection-molded PC cylindrical lens with excellent field of view.
- Anti-scratch, high-performance anti-fog function which provides distortion-free vision and enhanced impact resistance.
- Cat. 2 Amber with full mirror coating is ideal in sunny to scattered cloud conditions.

RAYVIK HELMET ACCESSORIES

UNISEX

Flint Winter Magnetic Face Mask System

940008 • One size | Black (90)

- Compatible with Rayvik X5 Helmet and **Flint** goggles, includes the breath box and Flint goggles magnetic nose piece.

Rayvik Winter Magnetic Face Mask System

940009 • One size | Black (90)

- Compatible with Rayvik X5 Helmet and **Rayvik** goggles, includes the breath box and Rayvik goggles magnetic nose piece.

Tec Layer Anti-Fog MX Balaclava

288324 • S/M, L/XL | Black (90)

Anti-fog management balaclava.

- Designed to be used with the Rayvik helmet or any other MX helmets.
- 47.5% polyester, 40% recycled polyester, 10% spandex, 2.5% neoprene.
- Mouth guard in neoprene with metal nose holder for fitting.
- Stretch, quick-dry fabric with brushed inner surface at head and neck.
- Water-resistant, wind-resistant and breathable fabric at neck.
- Flatlocked seams prevent skin chafing.
- Perfect to use with open-face helmets.
- Tec Layer logo.

Helmet Camera Mount

929176 • One size | Black (90)

- Helmet chin mount compatible with most cameras.
- Fits Rayvik X5 Helmet.

PYRA X1 HELMET

The next generation of the Pyra helmet is here. Engineered with Energy Reduction Technology (ERT™) and fully DOT & ECE certified, the new Pyra helmet delivers advanced protection. Featuring an adjustable peak, a micrometric quick-attach buckle, and camera-mount compatibility, this new-generation helmet combines performance, comfort, and versatility in a bold new shell design.

- ECE 22.06 and DOT certifications.
- Lightweight thermoplastic shell.
- Equipped with ERT™.
- Multi-density CONTEGO™ copolymer foam formulation provides enhanced impact test performance over standard EPS foams.
- Cheek Pads equipped with emergency pull strap.
- Removable and washable interior liners.
- Prescription eyeglasses friendly.
- Vibe universal communication system ready (sold separately).
- Camera mount ready (929176 sold separately).
- Micrometric quick-attach chin strap closure.
- Multiple airflow channels to keep you comfortable in all conditions.
- 4-year limited warranty.
- Compatible with the Winter Magnetic Face Guard System (sold separately).

LIGHTWEIGHT

HIGH AIRFLOW

UNIVERSAL COMMUNICATION SYSTEM COMPATIBLE

BRP CAMERA MOUNT COMPATIBLE

Pyra X1 Helmet

DOT ECE22.06

929211 · XS, S, M, L, XL, 2XL, 3XL

Black (90), Pink (36), Sand (03)

Weight from 1,280 g ± 50 g

Can-Am Pyra X1 Helmet

DOT ECE22.06

929212 · XS, S, M, L, XL, 2XL, 3XL

Green (70), Orange (12), Grey (09)

Weight from 1,280 g ± 50 g

Can-Am Pyra X1 Solid Helmet

DOT ECE22.06

929153 · XS, S, M, L, XL, 2XL, 3XL

Black (90)

Weight from 1,280 g ± 50 g

EXOME F5 HELMET

Designed with intent, the Exome F5 helmet features a true forced-air configuration, engineered from the ground up to deliver comfortable, balanced airflow—not simply adapted from a standard helmet. Combined with a fiberglass composite shell, ECE 22.06 & DOT certification, and more, the F5 delivers uncompromising comfort and protection for demanding riders

- LIGHTWEIGHT
- VERSATILE
- FORCED AIR VERSION
- COMMUNICATION SYSTEM COMPATIBLE
- PINLOCK 70 READY

UNISEX

NEW Exome F5 Forced Air Helmet

DOT ECE22.06

929204 • XS, S, M, L, XL, 2XL, 3XL | Black (90)

Full face forced air helmet (DOT/ECE) with advanced fiberglass composite shell.

- 4-year limited warranty.
- Full face helmet.
- Anti-scratch lens.
- Pinlock® ready (sold separately).
- Large neck curtain.
- 2 shell sizes.
- Quick-release chin strap.
- Eyewear compatible.
- Communication system ready.
- DOT/ECE 2206 certified.
- Weight from 1,375 g ± 50g.

NEW Can-Am Exome F5 Helmet

DOT ECE22.06

929210 • XS, S, M, L, XL, 2XL, 3XL | Black (90)

Full face helmet (DOT/ECE) with advanced fiberglass composite shell.

- 4-year limited warranty.
- Replace the face shield by the included Peak.
- Anti-scratch lens.
- Pinlock® ready (sold separately).
- 2 shell sizes.
- Quick-release chin strap.
- Eyewear compatible.
- Communication system ready.
- DOT/ECE 2206 certified.
- Weight from 1,285 g ± 50g.

NEW Can-Am Exome M1 Circuit Helmet

DOT ECE22.06

929198 • XS, S, M, L, XL, 2XL, 3XL | Black (90), Grey (09), Sand (03)

Modular helmet (DOT/ECE) with thermoplastic shell.

- 4-year limited warranty.
- Advanced plastic composite shell.
- Modular helmet.
- Anti-scratch lens.
- Pinlock® ready (sold separately).
- Smoke sun visor.
- Ventilation comes from 1 chin and 2 top intakes. The air is channeled to the rear extractor to maximize airflow.
- 2 shell sizes for better fit and comfort.
- Quick-release chin strap.
- Eyewear compatible.
- Communication system ready.
- DOT/ECE 2206 certified.

NEW Can-Am Exome M5 Carbon Helmet

DOT ECE22.06

929199 • XS, S, M, L, XL, 2XL | Black (90)

Modular helmet (DOT/ECE) with advanced carbon composite shell.

- 4-year limited warranty.
- Modular helmet.
- Anti-scratch lens.
- Pinlock® 70 anti-fog included.
- Smoke sun visor.
- Ventilation comes from 1 chin and 2 top intakes. The air is channeled to the rear extractor to maximize airflow.
- 2 shell sizes for better fit and comfort.
- Quick-release chin strap.
- Eyewear compatible.
- Communication system ready.
- DOT/ECE 2206 certified.

FULL-FACE ACCESSIBILITY

Open-Face Helmets

Designed for freedom and visibility. Offering a wide field of vision, allowing you to better enjoy the scenery and stay aware of your surroundings. You'll be sure to be comfortable with these stylish and ultra-light helmets.

LIGHTWEIGHT
Advanced light-plastic composite shell. Enjoyable for short or longer rides.

OPEN-FACE HELMET
Perfect for full-face accessibility.

COMFORT
Ultra-comfortable and washable linings.

LIGHTWEIGHT

DOT / ECE

Black with Graphics
929150_94 (DOT only)

Matte Black
929140_93 (DOT)
929185_93 (ECE)

UNISEX

Can-Am Retro Open-Face Helmet

DOT

929150 • S, M, L, XL, 2XL

Black with Graphics (94),
Matte Black (93)

- Advanced thermoplastic shell.
- Multi-density EPS.
- 2 shell sizes and 3 EPS sizes for better fit and comfort.
- Removable peak.
- Ultra-comfortable, removable and hand-washable linings.
- Quick-release chin strap.
- Eyewear compatible.
- Communication system ready.
- Fit: Medium Oval.
- DOT-certified.
- Not available in Europe.

Weight:
- XS–L: 1,140 g ± 50 g.
- XL–XXL: 1,200 g ± 50 g.

Can-Am Exome Open-Face Helmet

DOT ECE22.06

929140 (DOT - US)
929185 (ECE - Europe)
• XS, S, M, L, XL, 2XL, 3XL

Grey (09) - DOT only
Matte Black (93)

Open-Face Helmet (DOT/ECE) with plastic composite shell.
- 4-year limited warranty.
- Advanced plastic composite shell.
- Interchangeable retractable sun visor.
- Fixed aerodynamic peak.
- Ultra-comfortable and washable linings.
- Adjustable air vents and exhausts.
- Eyewear compatible.
- Anti-scratch Smoke visor.
- DOT-certified (929140).
- ECE 2206 certified (929185).

GOGGLES

UNISEX

NEW Can-Am Pyra Off-Road Goggles

448819 • One size | Black (90), Grey (09), Red (30)

The Can-Am Pyra goggles features injection PC lens which is anti-scratch, anti-fog and distortion-free optics.

- Thermo-formed 3-layer face foam offers optimal fit.
- No-slip silicone strap keeps goggles in place.
- Injection-molded PC cylindrical lens provides distortion-free vision and enhanced impact resistance.
- Single lens with anti-scratch and anti-fog performance.
- Removable nose guard for extra deflection against debris.
- OTG Capacity, fits over most of the prescription glasses on the market with lenses height below 2 in. (51 mm) and with branches width on 5¾ in. (146 mm).

Can-Am Flint Photochromic Goggles

448779 • One size | Charcoal Grey (07)

The Can-Am Flint Photochromatic goggles features an injected PC lens which is anti-scratch, anti-fog and distortion-free optics.

- Thermo-formed 3-layer face foam offers optimal fit.
- No-slip silicone strap keeps goggles in place.
- Injection-molded PC cylindrical lens provides distortion-free vision and enhanced impact resistance.
- Lens VLT from 80% to 28% with anti-scratch and anti-fog performance and with mirrored coating.
- Removable nose guard for extra deflection against debris.

MUD GEAR

UNISEX

Can-Am Waterproof Mud Jacket

456046 • S, M, L, XL, 2XL | Black (90), Camo (37)

Mud jacket made of waterproof PVC.

- 98.5% polyvinyl chloride (PVC), 1.5% mesh polyester.
- Electronically welded seams.
- Back panel ventilation (with mesh).
- Elastic cuffs, hem and hood.
- Can-Am logo.

Can-Am Waterproof Mud Pants

456067 • S, M, L, XL, 2XL | Black (90), Camo (37)

Oversized pants made of 100% waterproof PVC.

- 100% polyvinyl chloride (PVC).
- Electronically welded seams.
- Elastic waistband and ankle cuff.
- Can-Am logo.

RAINWEAR

UNISEX

NEW Can-Am Oh Sh*t Kit 2.0

456080 • S, M, L, XL, 2XL, 3XL | Black (90)

Can-Am Unisex Emergency Rain Kit, lightweight, compact and easy to pack. The kit includes a jacket and pants.

Unisex sizing designed to fit comfortably over riding gear (women are recommended to size down).

- 100% nylon, PU coating.
- Fit: Relaxed.
- Fully seam-sealed, waterproof and windproof.
- Breathable 10K/5K and PU coated with C0 durable water repellent.
- Adjustment at back neck collar.
- Elastic waistband for added comfort.
- Adjustable elasticized cuffs with Velcro tab.
- Pants connector loop to secure the jacket.
- Elastic, gusset and Velcro tab at the pant hem for optimal fit and adjustment.
- Storage bag for jacket and pants (attached to the jacket).
- Reflective details and logos for enhanced visibility.

Can-Am Seil Lite WP Jacket

456072 • S, M, L, XL, 2XL, 3XL | Hi-Vis Yellow (26), Black (90)

Simple yet carefully designed and beautifully made lightweight, weather protection, unisex jacket. 100% waterproof. Intelligent sizing—to fit over your normal riding gear, sized accordingly.

- Main material: 100% laminated polyester.
- Fit: Relaxed.
- Waterproof/breathable: 10K/3K, 2.5-layer membrane.
- Hi-vis material at sleeves on the Hi-is colorway.
- Fully seam-sealed.
- Double storm placket front closure with one-way zipper.
- Stowable adjustable hood (inside collar).
- Reflective details and logo.
- Elasticized cuff with silicone grip inside.
- Back panel ventilation.
- Adjustable hem.
- Lightweight.
- Unisex sizing to fit over clothes.
- One size down for women.

Can-Am Seil Lite WP Overpants

442457 • S, M, L, XL, 2XL, 3XL | Black (90)

Simple yet carefully designed and beautifully made lightweight, weather protection, unisex overpants. 100% waterproof. Intelligent sizing—to fit over your normal riding gear, sized accordingly.

- Main material: 100% laminated polyester.
- Fit: Relaxed.
- Waterproof: 10K/3K, 2.5-layer membrane.
- Elastic waistband with silicone grip all around.
- Silicone grip at bottom hem.
- Fully seam-sealed.
- Reflective logo.
- Hem opening with zipper.
- Stretch boot straps.
- Lightweight.
- Unisex sizing to fit over clothes.
- One size down for women.

RALLY COLLECTION

Introducing the Rally Collection, a bold new chapter in performance and style.
It carries the DNA of our iconic Phantom series and reimagines its signature graphics with a sharper, more dynamic, and unmistakably modern edge. Featuring premium jerseys and gloves, the Rally Collection is designed to pair seamlessly with our latest Pyra helmets and goggles, delivering a cohesive head-to-toe look for riders who demand both performance and attitude.

MEN'S

Can-Am Polo Shirt

286841 • S, M, L, XL, 2XL, 3XL | Black (90), Red (30)

Our Can-Am Polo with short-sleeves is stretchy, durable, and anti-wrinkle.

- 100% polyester.
- Moisture-wicking.
- Quick-dry.
- Sublimation print.
- Button placket.

Can-Am Rally Gloves

286836 • S, M, L, XL, 2XL, 3XL | Black (90), Red (30), Army Green (77)

Our Can-Am Rally gloves are highly breathable for hot riding conditions. Mesh on the upper and light perforated microsuede on the inside of the palm for a perfect grip and air flow.

- 92% polyester, 8% spandex.
- Ventilated air mesh upper construction.
- Reinforced thumb panel for extra durability.
- Single-layer microsuede palm with minimal padding.
- Stretch finger gussets.
- Embossed and expandable neoprene slip-on cuff.
- Touchscreen function.

UNISEX

NEW Can-Am Rally Jersey

288333 • XS, S, M, L, XL, 2XL, 3XL | Army Green (77), Pink (36), Red (30), Black with Graphics (94)

Rally jersey designed for performance and comfort, featuring lightweight technical materials and a bold new Rally print for an athletic Can-Am look.

- 100% polyester.
- Fit: Relaxed.
- Quick-dry, moisture-wicking fabric for maximum comfort.
- Antibacterial treatment to help reduce odors.
- Mesh underarm panels for increased ventilation.
- New Rally print.
- Sublimated logos.

NEW Can-Am Rally Flat Cap

288540 • One size | Black (90)

Can-Am Rally cap offering everyday comfort and a stylish look.

- 100% cotton twill.
- 5-panel construction.
- All-over Rally print.
- Soft plastisol print at front.
- Embroideries on side panels.
- Flat brim.
- Adjustable snapback closure.
- Branded inner tape.

Can-Am Rally Shadow D3O® Gloves

286871 • S, M, L, XL, 2XL, 3XL | Black (90), Black with Graphics (94)

Engineered for rugged trails and high-performance riding, the Rally Shadow gloves with D3O® deliver superior impact protection and all-day comfort.

- 92% polyester, 8% spandex.
- 4-way stretch top hand material that is highly abrasion resistant.
- D3O® knuckle protection.
- Sublimation print on top hand.
- Neoprene cuff with adjustable tab.
- D3O® 2 mm Aeromax foam palm to reduce vibration for a smoother ride.
- Silicone print at finger to improve grip and control.
- Perforated palm for airflow and comfort.
- TPR pull tab with Can-Am branding for easy on/off.
- Conductive microsuede palm.

GLOVES

MEN'S

NEW Can-Am Journey Mesh Gloves

CE UKCA

446377 • S, M, L, XL, 2XL, 3XL | Black (90)

Highly breathable and lightweight gloves designed for warm summer riding days.

The perfect complement to the Journey Mesh Jacket.

UKCA certified (UK Conformity Assessed marking).

- Content: 40% polyester, 40% nylon, 10% polyurethane, 5% rubber, 5% cotton
- CE/UKCA certified EN 13594:2015, Level 1.
- Micro-perforation at palm for increased airflow.
- TPU slider for extra protection and comfort while riding.
- Reinforced material at palm.
- Silicone print for better grip.
- Conductive micro suede at the palm, so you don't have to remove your gloves.
- Custom TPR strap for adjustability.
- Custom Pull tab.

Odyssey WP Gloves

CE UKCA

288072 • S, M, L, XL, 2XL, 3XL | Black (90)

Introducing our Men's Can-Am Odyssey WP Gloves, engineered for both elegance and performance. Constructed with premium fabric to offer unparalleled comfort and protection.

- Premium Shoeller Fabric.
- Sympatex waterproof membrane.
- PrimaLoft Gold Insulation; 100 g top hand, 60 g palm side.
- TPR Molded Knuckle Protection; CE Level 1+ Knuckle.
- Touch screen thumb and index finger.
- Scotchlite™ Reflective Hidden Panels.

WOMEN'S

NEW Can-Am Journey Mesh Gloves

CE UKCA

446386 • XS, S, M, L, XL, 2XL | Black (90)

Highly breathable and lightweight gloves designed for warm summer riding days.

The perfect complement to the Journey Mesh Jacket.

CE certified (EU safety, health, and environmental protection requirements).

UKCA certified (UK Conformity Assessed marking).

- Content: 40% polyester, 40% nylon, 10% polyurethane, 5% rubber, 5% cotton.
- CE/UKCA certified EN 13594:2015, Level 1.
- Micro-perforation at palm for increased airflow.
- TPU slider for extra protection and comfort while riding.
- Reinforced material at palm.
- Silicone print for better grip.
- Conductive micro suede at the palm, so you don't have to remove your gloves.
- Custom TPR strap for adjustability.
- Custom Pull tab.

NEW Odyssey WP Gloves

288045 • XS, S, M, L, XL | Black (90)

Introducing our Women's Can-Am Odyssey WP Gloves, engineered for both elegance and performance. Constructed with premium fabric to offer unparalleled comfort and protection.

- CE certified (EU safety, health and environmental protection requirements).
- Premium Shoeller Fabric.
- Sympatex waterproof membrane.
- PrimaLoft gold insulation; 100 g top hand, 60 g palm side.
- TPR Molded Knuckle Protection; CE level 1 + Knuckle.
- Touch screen thumb and index finger.
- Scotchlite™ Reflective Hidden Panels.

UNISEX

Can-Am Phantom D3O® WP Gloves

286872 • S, M, L, XL, 2XL, 3XL | Black (90)

Built for the toughest terrain and the most unpredictable weather, the Phantom D3O® WP gloves combine advanced D3O® impact protection with the waterproof, windproof, and breathable performance of Sympatex® technology.

- 4-way stretch top hand material that is highly abrasion resistant.
- DWR PFAS free.
- D3O® knuckle protection.
- TPR 3D Can-Am logo on top hand.
- Neoprene cuff with adjustable strap.
- Sympatex® waterproof and windproof membrane.
- Exclusive Can-Am digital camo print.
- D3O® 2 mm Aeromax foam palm to reduce vibration for a smoother ride.
- Conductive silicone hexa print at palm to improve grip, control and shield wipe.
- TPR pull tab with Can-Am branding for easy on/off.

GLOVES (measure palm width)

UNISEX

	XS	S	M	L	XL	2XL	3XL
Sizing Code	**02**	**04**	**06**	**09**	**12**	**14**	**16**
Palm (inches)	3	3¼	3½	4	4½	5	5½
Palm (cm)	7.5	8	9.5	10	11.5	13	14

BAGS

UNISEX

BRP 20 L Laptop Backpack

950003 • One size | Black (90)

- 20 L capacity.
- High resistance 900D polyester material.
- Full rigid 3D shell construction standing backpack.
- Laptop pocket holds up to a 15" laptop, separated from the main compartment.
- Adjustable chest straps.
- Main compartment organization pocket wth key clip.
- Foam padding on straps and back for comfort.
- Carry-on luggage handle slider.
- Water bottle side pouch.
- Hidden small pocket on one side bottle compartment.
- Exchangeable branded logo patch (Ski-Doo, Lynx, Sea-Doo, Can-Am).
- Dimensions:
  L 11.4" x W 8.2" x H 18.9"
  L 29 cm x W 21 cm x H 48 cm.

BRP 90 L Duffle Bag

950001 • One size | Black (90)

- 90 L capacity.
- 600D polyester main construction with a 420D TPU coated bottom.
- Ready to handle all your gear with one main large compartment and 2 separated side compartments for boots and helmets.
- Rigid 3D shaped molded side compartments ideal to protect your helmet.
- Durable strap attachment system by Duraflex™.
- Robust pull handles on each side.
- Changing mat in a separated zippered compartment.
- YKK™ heavy-duty zippers.
- Exchangeable branded logo patch (Ski-Doo, Lynx, Sea-Doo, Can-Am).
- Dimensions:
  L 33" x W 12.2" x H 17.3"
  L 84 cm x W 31 cm x H 44 cm.

CAN-AM x FASTHOUSE

MEN'S

Unisex Can-Am x FH Dust Gloves

446389 • XS, S, M, L, XL, 2XL | Army Green (77), Black (90)

The Dust Gloves utilize quality materials with a traditional moto fit.

- 77% polyamide, 15% polyurethane, 7% elastane, 1% polychloroprene.
- Durable form-fitting 2-way stretch material.
- Perforated Clarino® palm and thumb guards.
- Touchscreen fingertips on index and thumb.
- Gusseted knuckles for increased dexterity.
- Molded neoprene low-pro cuff.
- Mesh finger gussets and silicone grippers.
- TPR and printed embellishments throughout.

Can-Am x FH Dust Pants

288018 • 28, 30, 32, 34, 36, 38, 40, 42 | Black (90)

The Dust Pants are designed for those who venture off the beaten path. They feature a classic fit with cargo-style pockets, full-grain leather inner knee panels, and 600D poly main panel construction.

- 69% polyester, 27% nylon, 4% spandex.
- Fit: Fitted.
- Zippered cargo pockets.
- Zippered mesh ventilation pockets on both thighs.
- Zippered fly for easy pit stops.
- 600-denier poly and 4-way stretch main body fabric.
- High-strength nylon thread, double- and triple-stitched seams.
- Silky soft tricot, ¾-length knee brace, optimized lining.
- Patterned and fit for every style of rider.

Please refer to the sizing chart below:

Size	Code	Size	Code	Size	Code	Size	Code
28	36	32	38	36	40	40	42
30	37	34	39	38	41	42	43

NEW Can-Am x FH Motorall® Flex 2.0

286842 • 28, 30, 32, 34, 36, 38, 40, 42 | Black (90)

Designed with a classic straight-leg fit, the Motorall Flex 2.0 delivers unrestricted movement thanks to its durable 4-way stretch construction. Functional details like strategically placed ventilation/storage pockets and easy-access closures make it as practical as it is comfortable. Wide elastic shoulder straps ensure a fast, secure step-in fit, so you can gear up and go without slowing down.

- 84% polyester, 14% nylon, 2% Spandex.
- Classic fit with a straight-leg cut.
- Front chest and thigh cargo pockets with hook-and-loop closure.
- Zippered fly for quick, easy pit stops.
- Adjustable wide elastic comfort straps with a jacquard artwork for effortless step-in entry with adjuster.
- 4-way stretch main body fabric for full mobility.
- High-strength nylon thread with double and triple-stitched seams for durability.

Please refer to the sizing chart below:

Size	Code	Size	Code	Size	Code	Size	Code
28	36	32	38	36	40	40	42
30	37	34	39	38	41	42	43

Can-Am x FH Motorall®

441716 • 28, 30, 32, 34, 36, 38, 40, 42 | Black (90)

The Motorall® is our tried and true Grindhouse moto pant in an overalls cut.

- 69% polyester, 27% nylon, 4% spandex.
- Fit: Fitted.
- Zippered cargo pockets on front chest and both thighs.
- Zippered mesh ventilation pockets on both thighs.
- Zippered fly for easy pit stops.
- Adjustable elastic comfort straps for step-in entry.
- 600-denier poly and 4-way stretch main body fabric.
- Upper chest MOLLE straps for radios, tools and accessories.
- High-strength nylon thread double- and triple-stitched seams.
- Silky soft tricot, ¾-length knee brace, optimized lining.
- Patterned and fit for every style of rider.

Please refer to the sizing chart below:

Size	Code	Size	Code	Size	Code	Size	Code
28	36	32	38	36	40	40	42
30	37	34	39	38	41	42	43

MEN'S

NEW Can-Am x FH Club Jersey

288376 · S, M, L, XL, 2XL, 3XL | Black (90), White (01)

Can-Am x Fasthouse collaboration jersey, designed for performance, durability.

- 100% polyester.
- High-quality silk-screened graphics.
- Moisture-wicking materials to help keep you dry.
- Mesh vent paneling on sides and under sleeves for enhanced airflow.
- Drop tail back panel to keep the jersey tucked in and secure.
- Athletic fit, moderately slim through the body and sleeves.
- Overlocked stitching for superior durability and longevity.

Can-Am x FH Dust Jersey

288234 · S, M, L, XL, 2XL, 3XL | Army Green (77), Black (90)

High-performance jersey utilizing breathable materials with a traditional cut.

- 100% polyester.
- Fit: Regular.
- High-quality silk-screened graphics.
- Moisture-wicking materials help keep you dry.
- Mesh vent paneling on sides and under sleeves for airflow.
- Drop tail on back panel to keep jersey tucked in and secure.
- Athletic fit, moderately slim throughout body and sleeves.
- Overlocked stitching for superior durability and longevity.

Can-Am x FH Scorch Pullover Hoodie

288387 · S, M, L, XL, 2XL, 3XL | Black (90)

Midweight hooded pullover for men from the Can-Am x Fasthouse collaboration.

- 70% cotton, 30% recycled polyester.
- Soft midweight material (280 gsm).
- Two front welt pockets.
- Metal eyelets and hood drawstring.
- Pullover fit with lined hood.
- Screen-printed graphics.
- Ribbed sleeve cuffs and waistband hem.

Can-Am x FH Mav Pullover Hoodie

288227 · S, M, L, XL, 2XL, 3XL | Gold (11)

Midweight hooded pullover for men.

- 70% cotton, 30% recycled polyester.
- Soft midweight material (280 gsm).
- Fit: Regular.
- Two front welt pockets.
- Metal eyelets and hood drawstring.
- Screen-printed graphics.
- Ribbed sleeve cuffs and waistband hem.

NEW Can-Am x FH Desert T-shirt LS

288341 · S, M, L, XL, 2XL, 3XL | Charcoal Grey (09), Silver (08)

Desert T-shirt long sleeves designed as part of the Can-Am x Fasthouse collaboration, offering a clean, structured look for everyday wear.

- 60% cotton, 40% polyester (160 gsm).
- Fit: Regular.
- Soft plastisol print at chest.
- Large soft plastisol graphic at back.
- Soft plastisol print on arm.
- Ribbed collar.
- Printed inner neck label for added comfort.
- Can-Am x Fasthouse label wearers bottom right.

NEW Can-Am x FH Heritage T-shirt

288342 · S, M, L, XL, 2XL, 3XL | Army Green (77), Sand (03)

Heritage T-shirt designed as part of the Can-Am x Fasthouse collaboration, offering a clean, structured look for everyday wear.

- 60% cotton, 40% polyester (160 gsm).
- Fit: Regular.
- Soft plastisol print at chest.
- Large soft plastisol graphic at back.
- Ribbed collar.
- Printed inner neck label for added comfort.
- Can-Am x Fasthouse label wearers right sleeves.

MEN'S

NEW Can-Am x FH Off-Road Club T-shirt

288344 • S, M, L, XL, 2XL, 3XL | Black (90), White (01)

Off-Road Club T-shirt designed as part of the Can-Am x Fasthouse collaboration, offering a clean, structured look for everyday wear.

- 60% cotton, 40% polyester (160 gsm).
- Fit: Regular.
- Soft plastisol print at chest.
- Large soft plastisol graphic at back.
- Ribbed collar.
- Printed inner neck label for added comfort.
- Can-Am x Fasthouse label wearers right sleeves.

Can-Am x FH High Country T-shirt

288235 • S, M, L, XL, 2XL, 3XL | Bronze (92)

Can-Am x Fasthouse collaboration T-shirt with large soft plastisol print at back and small print at front chest.

- 60% cotton, 40% polyester.
- Fit: Slim.
- Rib-knit crew neck.
- Woven label Can-Am x Fasthouse on wearer's right sleeve.

Can-Am x FH Sandstrike T-shirt

288371 • S, M, L, XL, 2XL, 3XL | Black (90), Brown (04)

Can-Am x Fasthouse collaboration T-shirt.

- 100% cotton.
- 145 gsm.
- Fit: Slim.
- Ribbed collar.

Can-Am x FH Scorch T-shirt

288372 • S, M, L, XL, 2XL, 3XL | Black (90), Silver (08)

Can-Am x Fasthouse collaboration T-shirt.

- 100% cotton.
- 145 gsm.
- Fit: Slim.
- Ribbed collar.

Can-Am x FH Off-Road Crew T-shirt

288224 • S, M, L, XL, 2XL, 3XL | Army Green (77), Black (90)

Can-Am x Fasthouse collaboration T-shirt with large Off-Road graphic at back.

- 60% cotton, 40% polyester.
- Fit: Slim.
- Ribbed collar.
- Quote at left chest and back.

Can-Am x FH Coilover Tee

288065 • S, M, L, XL, 2XL, 3XL | Black (90)

Ultrasoft 100% combed ring-spun cotton tee.

- 100% combed ring-spun cotton.
- Fit: Slim.
- Soft and lightweight material.
- Crew collar.
- Plastisol ink screen-printed graphics.

WOMEN'S

NEW Can-Am x FH Desert Pullover Hoodie

288339 • S, M, L, XL, 2XL | Black (90)

Pullover hoodie designed as part of the Can-Am x Fasthouse collaboration, offering everyday comfort and a bold, casual style with premium graphic details.

- 100% cotton fleece.
- Fit: Regular.
- Soft plastisol graphic at front.
- Kangaroo pocket.
- Ribbed cuffs and hem.
- Can-Am x Fasthouse label at sleeve hem.
- Heat-transfer main label inside for added comfort.

Can-Am x FH Off-Road Crew Pullover Hoodie

288229 • S, M, L, XL, 2XL | Ivory (97)

Midweight hooded pullover for women.

- 80% cotton, 20% polyester.
- Fit: Regular.
- Soft midweight material (280 gsm).
- Two front welt pockets.
- Metal eyelets and hood drawstring.
- Screen-printed graphics.
- Ribbed sleeve cuffs and waistband hem.

Can-Am x FH Dust to Dawn T-shirt

288375 • XS, S, M, L, XL, 2XL | Black (90), Ivory (97)

Can-Am x Fasthouse collaboration Women's T-shirt.

- 100% cotton.
- 190 gsm.
- Fit: Slim.
- Ribbed collar.

UNISEX

Can-Am x FH Adventure Beanie

288231 • One size | Army Green (77), Black (90)

Can-Am x Fasthouse collaboration heavy-knit cuff beanie.

- 100% acrylic.
- Ultrasoft anti-itch material.
- Can-Am x Fasthouse woven patch at front.
- Small folded Can-Am x Fasthouse label at back.

Can-Am x FH Straw Hat

448814 • One size | Khaki (05)

Wide-brim straw hat with adjustable chin strap.

- 100% straw.
- Patch at front.
- One size fits most.

Can-Am x FH Tube

288232 • One size | Black (90)

Multipurpose, stretchy and comfortable tubular headwear.

- 92% polyester, 8% spandex.
- 12 different configurations: bandana, headband, balaclava and more.

UNISEX

NEW Can-Am x FH Dust Cap

288335 • One size | Black (90), Ivory (97)

Can-Am x Fasthouse collaboration cap, offering everyday comfort and a bold stylish look.

- 100% cotton twill.
- Mesh: 100% polyester.
- 5-panel construction.
- Soft plastisol print at front.
- Curved brim.
- Adjustable snapback closure.
- Mesh panels at back for ventilation.
- Branded inner tape with Fasthouse and Can-Am.
- Fasthouse embroidery on the side panel.

NEW Can-Am x FH Club Cap

288336 • One size | Black (90)

Can-Am x Fasthouse collaboration club cap offering a clean, structured look for everyday wear.

- 80% acrylic and 20% wool.
- 5-panel construction.
- Embroidered patch with screen-printed details at front.
- Flat brim.
- Adjustable snapback closure.
- Branded inner tape.
- FH and Can-Am embroideries on side panels.

Can-Am x FH Dust to Dawn Mesh Flat Cap

288370 • One size | Black (90), White (01)

A mid-profile trucker 5-panel snapback from the Can-Am x Fasthouse collaboration.

- 48% polyester, 42% acrylic, 10% wool.
- 5-panel construction.
- Flat brim and matching underbrim.
- Branded taping and Fasthouse® flag label.
- Side logo embroidery Can-Am x Fasthouse on side parts.
- Snapback closure at back.

Can-Am x FH Dust Flat Cap

288374 • One size | Black (90)

A deep profile structured 5-panel snapback from the Can-Am x Fasthouse collaboration using premium acrylic wool.

- 80% acrylic, 20% wool.
- 5-panel construction.
- Deep profile, structured. 3D embroidery with print at front.
- Side logo embroidery Can-Am x Fasthouse on side parts.
- Branded taping and flag label.

YOUTH

NEW Can-Am x FH Club Cap

288347 • One size | Black (90)

Club cap for kids designed as part of the Can-Am x Fasthouse collaboration, offering a clean, structured look for everyday wear.

- 80% acrylic and 20% wool.
- 5-panel construction.
- Embroidered patch with screen-printed details at front.
- Flat brim.
- Adjustable snapback closure.
- Branded inner tape.
- FH embroidery on the side panel.
- Can-Am embroidery on the side panel.

NEW Can-Am x FH Club Jersey

288346 • 3-4, 5-6, 7-8, 10-12, 14 | Black (90)

Club Jersey created as part of the Can-Am x Fasthouse collaboration, designed for performance, durability, and airflow, featuring premium graphics and an athletic fit for confident riding.

- 100% polyester.
- High-quality silk-screened graphics.
- Moisture-wicking materials to help keep you dry.
- Mesh vent paneling on sides and under sleeves for enhanced airflow.
- Drop tail back panel to keep the jersey tucked in and secure.
- Athletic fit, moderately slim through the body and sleeves.
- Overlocked stitching for superior durability and longevity.

24.7 X CAN-AM COLLECTION

UNISEX

NEW Can-Am X 24.7 Yellow/Off-White Flat Cap

288587 • One size | Ivory (97)

Can-Am X 24.7 Hunt collaboration.
- 100% cotton corduroy.
- 5-panel construction.
- Flat brim.
- Half structured front.
- Rope.
- Embroidered woven patch at front and branding on sides of the cap.
- Branded Can-Am taping inside.
- Snapback closure at back.

NEW Can-Am X 24.7 Yellow Corduroy Cap

288588 • One size | Yellow (10)

Can-Am x 24.7 Hunt collaboration cap with a flat visor and corduroy fabric for a vintage-inspired, comfortable fit.
- 100% cotton.
- 5-panel construction.
- Flat brim.
- Rope.
- Embroidered Can-Am colored patch at the front and branding on both sides of the cap.
- Branded Can-Am taping inside.
- Snapback closure at back.

Can-Am x 24.7 Curved Cap

288482 • One size | Black (90)

Can-Am x 24.7 Hunt collaboration.
- 100% cotton corduroy.
- 5-panel construction.
- Curved brim.
- Embroidered woven patch at front.
- Embroidered brands on both sides of the cap.
- Branded Can-Am taping inside.
- Snapback closure at back.

Can-Am x 24.7 Green Rope Cap

288484 • One size | Army Green (77)

Can-Am x 24.7 Hunt collaboration.
- 100% cotton.
- 5-panel construction.
- Flat brim.
- Rope.
- Embroidered Duck patch in Can-Am color at front.
- Embroidered brands on both sides of the cap.
- Branded Can-Am taping inside.
- Snapback closure at back.

YOUTH

NEW Can-Am x 24.7 Curved Cap

288590 • One size | Black (90)

Can-Am X 24.7 Hunt collaboration for youth.
- 100% cotton.
- 5-panel construction.
- Curved brim.
- Embroidered Duck patch at front.
- Embroidered brands on both sides of the cap.
- Branded Can-Am taping inside.
- Snapback closure at back.

EVERYDAY WEAR

MEN'S

NEW Can-Am Windproof Fleece

456078 • S, M, L, XL, 2XL, 3XL | Black (90)

The Can-Am Windproof Fleece is ideal for layering under the Journey Mesh Jacket to add warmth and block wind, or to be worn on its own off the vehicle.

- 100% polyester (295 gsm).
- Fit: Regular.
- Breathable windproof TPU membrane.
- Logo Can-Am at shoulder.
- Three zippered pockets.
- Premium YKK® zippers throughout.
- Reflective details and logos for enhanced visibility.

NEW Can-Am Turbo T-shirt LS

288329 • S, M, L, XL, 2XL, 3XL | Black (90)

Can-Am Men's Turbo LS T-Shirt designed with soft fabric for comfortable everyday wear.

- 60% cotton, 40% polyester (160 gsm).
- Fit: Regular.
- Soft plastisol arm print and back graphic.
- Ribbed collar.
- Printed inner neck label for added comfort.
- Can-Am label wearers bottom right.

NEW Can-Am Cosmos T-shirt

288330 • S, M, L, XL, 2XL, 3XL | Army Green (77), Heather Charcoal (29)

Can-Am Cosmos T-Shirt made with soft fabric for comfortable everyday wear.

- 60% cotton, 40% polyester (160 gsm).
- Fit: Regular.
- Soft plastisol chest print and back graphic
- Ribbed collar.
- Printed inner neck label for added comfort.
- Can-Am label wearers bottom right.

NEW Can-Am Sizzled T-shirt

288331 • S, M, L, XL, 2XL, 3XL | Heather Grey (27), Black (90)

Can-Am Sizzled T-Shirt made with soft fabric for comfortable everyday wear.

- Solid color: 60% cotton, 40% polyester (160 gsm).
- Heather: 93% cotton, 7% polyester (160 gsm).
- Fit: Regular.
- Soft plastisol print at chest.
- Ribbed collar.
- Printed inner neck label for added comfort.
- Can-Am label wearers bottom right.

NEW Can-Am Flameter T-shirt

288388 • S, M, L, XL, 2XL, 3XL | Black (90), Army Green (77)

Can-Am Men's Flameter T-Shirt made with soft fabric for comfortable everyday wear.

- 60% cotton, 40% polyester (160 gsm).
- Fit: Regular.
- Soft plastisol chest print and back graphic.
- Ribbed collar.
- Printed inner neck label for added comfort.
- Can-Am label wearers bottom left.

MEN'S

NEW Can-Am Best Way T-shirt

288391 • S, M, L, XL, 2XL, 3XL

Bronze (92), Heather Charcoal (29)

Can-Am Best Way T-Shirt made with soft fabric for comfortable everyday wear.

- 60% cotton, 40% polyester (160 gsm).
- Fit: Regular.
- Soft plastisol chest print and back graphic.
- Ribbed collar.
- Printed inner neck label for added comfort.
- Can-Am label wearers bottom left.

Can-Am Heritage T-shirt

288275 • S, M, L, XL, 2XL, 3XL

Black (90), Heather Grey (27)

Men's casual graphic T-shirt with heritage artwork at back.

- Solid: 60% cotton, 40% polyester.
- Heather: 97% cotton, 3% polyester.
- Fit: Regular.
- Ribbed collar.
- Small Can-Am logo at left chest and artwork at back.
- Small embroidered label at front.

Can-Am '73 T-shirt

288276 • S, M, L, XL, 2XL, 3XL

Black (90)

Men's casual graphic T-shirt with large '73 Can-Am logo at front.

- 60% cotton, 40% polyester.
- Fit: Regular.
- Ribbed collar.
- Small embroidered label at front.

Can-Am Off-Road Livin' T-shirt

288423 • S, M, L, XL, 2XL, 3XL

Black (90), Bronze (92)

Men's casual graphic T-shirt.

- 60% cotton, 40% polyester.
- Fit: Slim.
- Ribbed collar.
- Small Can-Am graphic at left chest and artwork at back.

Can-Am Division T-shirt

288432 • S, M, L, XL, 2XL, 3XL

Army Green (77), Black (90)

Men's casual graphic T-shirt.

- 60% cotton, 40% polyester.
- Fit: Slim.
- Ribbed collar.

Can-Am Unstoppable T-shirt

288433 • S, M, L, XL, 2XL, 3XL

Black (90), Bronze (92)

Men's casual graphic T-shirt.

- 60% cotton, 40% polyester.
- Fit: Slim.
- Ribbed collar.

MEN'S

Can-Am Vision T-shirt

288488 • S, M, L, XL, 2XL, 3XL | Black (90), Heather Charcoal (29)

- Men's casual graphic T-shirt.
- 60% cotton, 40% polyester.
- Fit: Slim.
- Ribbed collar.
- Small graphic at left chest and artwork at back.

Can-Am DNA T-shirt

288173 • S, M, L, XL, 2XL, 3XL | Army Green (77), Black (90), Sand (03)

Men's Can-Am graphic T-shirt, perfect for everyday wear.

- 60% cotton, 40% polyester.
- Fit: Regular.
- Ribbed collar.
- Can-Am graphic at front.

Can-Am Bonded Plaid Overshirt

288163 • S, M, L, XL, 2XL, 3XL | Burgundy (35)

Can-Am bonded plaid overshirt offering warmth, durability, and a premium outdoor aesthetic, designed with a flannel exterior and a soft fleece interior for everyday comfort.

- 100% cotton flannel with herringbone weave, bonded to micro polar fleece.
- Soft, warm, and structured fabric construction.
- Two chest pockets with flaps.
- Snaps at center front and chest pocket flaps, embossed with the Can-Am logo.
- Embroidered Can-Am logo on pocket flap.
- Self hanger loop at back yoke.
- Snap cuffs.

WOMEN'S

NEW Can-Am Windproof Fleece

456079 • XS, S, M, L, XL, 2XL | Black (90)

- The Can-Am Windproof Fleece is ideal for layering under the Journey Mesh Jacket to add warmth and block wind, or to be worn on its own off the vehicle.
- Constructed with grid polar fleece bonded to a windproof membrane. The grid structure helps release excess heat and moisture during movement, making it highly suitable for riding comfort.
- 100% polyester (295 gsm).
- Fit: Regular.
- Breathable windproof TPU membrane.
- Two zippered pockets.
- Premium YKK® zippers throughout.
- Reflective details and logos for enhanced visibility.

NEW Can-Am Turbo T-shirt

288332 • XS, S, M, L, XL, 2XL | Heather Charcoal (29)

Can-Am Women's Turbo T-Shirt made with soft fabric for comfortable everyday wear.

- 60% cotton, 40% polyester (160 gsm).
- Fit: Slim.
- Soft plastisol print at chest.
- Ribbed collar.
- Printed inner neck label for added comfort.
- Can-Am label wearers bottom right.

NEW Can-Am Flameter T-shirt

288389 • XS, S, M, L, XL, 2XL | Heather Charcoal (29), Pink (36)

Can-Am Women's Flameter T-shirt made with soft fabric for comfortable everyday wear.

- 60% cotton, 40% polyester (160 gsm).
- Fit: Slim.
- Soft plastisol chest print and back graphic.
- Ribbed collar.
- Printed inner neck label for added comfort.
- Can-Am label wearers bottom left.

WOMEN'S

NEW Can-Am Wind Sister T-shirt

288390 • XS, S, M, L, XL, 2XL | Heather Grey (27)

Can-Am Wind Sister T-Shirt made with soft fabric for comfortable everyday wear.

- 93% cotton, 7% polyester (160 gsm).
- Fit: Slim.
- Soft plastisol chest print and back graphic.
- Ribbed collar.
- Printed inner neck label for added comfort.
- Can-Am label wearers bottom left.

Can-Am '73 T-shirt

288286 • XS, S, M, L, XL, 2XL | Black (90)

Women's casual graphic T-shirt with large '73 Can-Am logo at front.

- 60% cotton, 40% polyester.
- Fit: Slim.
- Ribbed collar.
- Small embroidered label at front.

Can-Am Division T-shirt

288434 • XS, S, M, L, XL, 2XL | Black (90), Pink (36)

Women's casual graphic T-shirt.

- 60% cotton, 40% polyester.
- Slim fit.
- Ribbed collar.
- Can-Am logo at chest and artwork at back.

UNISEX

Can-Am Phantom Jersey

288270 • S, M, L, XL, 2XL, 3XL | Army Green (77), Charcoal Grey (07), Dark Navy (16), Grey (09)

Our classic Can-Am jersey with a new look!

- 100% polyester.
- Fit: Regular.
- Quick-dry, moisture-wicking fabric for maximum comfort.
- Antibacterial treatment for anti-odor.
- Mesh fabric for extra ventilation at underarms.
- Sublimated logos.

NEW Can-Am Flameter Flat Cap

288403 • One size | Army Green (77)

Can-Am Flameter cap designed with a flat visor for a classic, comfortable silhouette.

- 100% cotton twill.
- 5-panel construction.
- Embroideries on front panel.
- Adjustable snapback closure.
- Branded inner tape.

NEW Can-Am Waypoint Curved Cap

288404 • One size | Sand (03), Black (90)

Can-Am Waypoint cap designed with a curved visor for a classic, comfortable silhouette.

- 100% cotton twill.
- 6-panel construction.
- Soft plastisol print on the front.
- Embroidered twill patch applied on the front.
- Curved brim.
- Adjustable snapback closure.
- Can-Am-branded inner tape.

UNISEX

NEW Can-Am Turbo Curved Cap

288539 • One size | Black (90), Bronze (92)

Can-Am Turbo cap designed with a curved visor for a classic, comfortable silhouette.

- 100% cotton twill.
- Mesh 100% polyester.
- 6-panel construction.
- 3D embroidery at front.
- Adjustable snapback closure.
- Mesh panels at back for ventilation.
- Can-Am-branded inner tape.

NEW Can-Am Cosmos Flat Mesh Cap

288541 • One size | Black (90)

Can-Am Cosmos cap with a flat visor and mesh back panel for a retro-inspired, comfortable fit.

- 100% cotton.
- Mesh 100% polyester.
- Structured-5 panel cap.
- Snapback closure at back.
- Patch at center front.
- Small Can-Am label at back.

Can-Am Unstoppable Flat Cap

288495 • One size | Black (90), Silver (08)

Unisex Unstoppable cap with flat brim offering everyday comfort and a stylish look.

- 100% cotton.
- 5-panel construction.
- Flat brim.
- Snapback closure at back.
- Inside Can-Am branded tape.
- Soft plastisol print at front.

Can-Am Racing Adjustable Cap

288080 • One size | Black (90), Charcoal Grey (07)

Can-Am Racing cap offering everyday comfrot and a stylish look.

- 100% cotton twill.
- 6-panel construction.
- Curved brim.
- Can-Am logo on the front.
- Racing inspiration.
- Snapback closure at back with small Can-Am label.
- Can-Am–branded inner tape.

YOUTH

NEW Can-Am Cosmos T-shirt

288345 • 3–4, 5–6, 7–8, 10–12 | Army Green (77), Heather Grey (27)

Can-Am Cosmos T-Shirt for kids made with soft fabric for comfortable everyday wear.

- Solid color: 60% cotton, 40% polyester (160 gsm).
- Heather: 93% cotton, 7% polyester (160 gsm).
- Fit: Regular.
- Soft plastisol print at chest.
- Ribbed collar.
- Printed inner neck label for added comfort.

NEW Can-Am Est. '73 Cap

288348 • One size | Army Green (77)

Can-Am Est. '73 curved cap for kids offering everyday comfort and a clean, stylish look.

- 100% cotton twill.
- 6-panel construction.
- 3D embroidery at front.
- Curved brim.
- Adjustable snapback closure.
- Branded inner tape.

SIGNATURE COLLECTION

MEN'S

NEW Can-Am Emblem LS T-shirt

288538 • S, M, L, XL, 2XL, 3XL | Black (90)

Can-Am Emblem LS T-Shirt designed with soft fabric for comfortable everyday wear.

- 60% cotton, 40% polyester (160 gsm).
- Fit: Regular.
- Soft plastisol print at chest.
- Ribbed collar.
- Printed inner neck label for added comfort.
- Can-Am label wearers bottom right.

Can-Am Emblem T-shirt

288148 • S, M, L, XL, 2XL, 3XL | Black (90), Heather Grey (27), Sand (03), Army Green (77)

Men's Signature T-shirt with Can-Am logo and emblematic lines at front.

- 60% cotton, 40% polyester.
- Heather Grey (27): 97% cotton, 3% polyester.
- Fit: Regular.
- Ribbed collar.

Can-Am Emblem Crewneck

288241 • S, M, L, XL, 2XL, 3XL | Black (90), Heather Grey (27)

Can-Am Emblem crewneck offers warmth, comfort, and a premium feel, designed with a heavyweight fleece fabric and a soft hand-feel finish for everyday wear.

- 60% cotton, 40% polyester fleece (300 gsm).
- Fit: Relaxed.
- Carbonized bio finish for enhanced softness and comfort.
- Warm, comfortable, heavyweight, and easy-care fabric.
- Soft plastisol print at front.
- Ribbed collar, hem, and sleeve cuffs.
- Heat-transfer main label inside for added comfort.

NEW Can-Am Emblem Pullover Hoodie

288535 • S, M, L, XL, 2XL, 3XL | Black (90)

Can-Am Emblem Pullover Hoodie made with heavyweight fleece for warmth and premium comfort.

- 60% cotton, 40% polyester fleece (300 gsm).
- Fit: Relaxed.
- Mineral wash for an aged and authentic look.
- Carbonized bio finish for enhanced softness and comfort.
- Easy-care fabric.
- Soft plastisol print at front.
- Heat-transfer main label inside for added comfort.
- Rib at cuffs and hem.
- Kangaroo pocket.

Can-Am Emblem Zip-Up Hoodie

288338 • S, M, L, XL, 2XL, 3XL | Black (90), Sand (03)

Signature hooded zip-up sweatshirt.

- 60% cotton, 40% polyester.
- 300 gsm.
- Fit: Relaxed.
- Carbonized bio finish.
- Kangaroo pocket.
- Rib on cuffs and hem.
- Drawstring hood.

MEN'S

Can-Am Emblem Pullover Hoodie

288242 • S, M, L, XL, 2XL, 3XL | Army Green (77), Black (90), Sand (03)

Men's Signature pullover hoodie with Can-Am logo and emblematic lines at front.

- 60% cotton, 40% polyester.
- 300 gsm.
- Fit: Relaxed.
- Carbonized bio finish for a softer and premium look.
- Rib at cuffs and hem.
- Kangaroo pocket.

Can-Am Off-Road Livin' Pullover Hoodie

288425 • S, M, L, XL, 2XL, 3XL | Black (90), Bronze (92)

Casual Can-Am pullover hoodie.

- 60% cotton, 40% polyester.
- 300 gsm.
- Fit: Relaxed.
- Carbonized bio finish for a softer and premium look.
- Rib at cuffs and hem.
- Kangaroo pocket.
- Soft plastisol print graphic at back. Regular Can-Am logo at left chest.

WOMEN'S

Can-Am Emblem T-shirt

288187 • XS, S, M, L, XL, 2XL | Black (90), Pink (36)

Women's Signature T-Shirt with Can-Am logo and emblematic lines at front.

- 60% cotton, 40% polyester (160 gsm)
- Fit: Slim
- Soft plastisol print at chest.
- Ribbed collar.
- Printed inner neck label for added comfort.
- Can-Am label wearers bottom right.

Can-Am Emblem Crewneck

288243 • XS, S, M, L, XL, 2XL | Black (90)

Can-Am Emblem crewneck offers warmth, comfort, and a premium feel, designed with a heavyweight fleece fabric and a soft hand-feel finish for everyday wear.

- 60% cotton, 40% polyester fleece (300 gsm).
- Fit: Regular.
- Carbonized bio finish for enhanced softness and comfort.
- Warm, comfortable, heavyweight, and easy-care fabric.
- Soft plastisol print at front.
- Ribbed collar, hem, and sleeve cuffs.
- Heat-transfer main label inside for added comfort.

Can-Am Emblem Pullover Hoodie

288244 • XS, S, M, L, XL, 2XL | Army Green (77), Black (90)

Can-Am Emblem pullover hoodie offers warmth, comfort, and a premium feel, designed with a heavyweight fleece fabric and a soft hand-feel finish for everyday wear.

- 60% cotton, 40% polyester fleece (300 gsm).
- Fit: Regular.
- Carbonized bio finish for enhanced softness and comfort.
- Warm, comfortable, heavyweight, and easy-care fabric.
- Soft plastisol print at front.
- Heat-transfer main label inside for added comfort.
- Rib at cuffs and hem.
- Kangaroo pocket.

UNISEX

Can-Am 1973 Signature Cap

288112 • One size | Red (30)

Signature 1973 curved cap offering everyday comfort and a stylish look.
- 100% cotton twill.
- 6-panel construction.
- Embroidery Can-Am patch at front.
- Curved brim.
- Adjustable snapback closure.
- Can-Am–branded inner tape.

NEW Can-Am Flag Emblem Cap

286843 • One size | Black (90), Army Green (77), Grey (09), Sand (03)

Can-Am Flag Emblem Cap designed with a curved visor for a classic, comfortable silhouette.
- 100% cotton twill.
- 6-panel construction.
- Center-front Can-Am embroidered logo.
- Curved brim for a classic, structured look.
- Adjustable snapback closure.
- Flag label on the side panel.
- Can-Am-branded inner tape.

Can-Am Emblem Cap

288142 • One size | Sand (03)

Signature Cap with Can-Am logo and emblematic lines at front.
- 100% cotton.
- Embroidered Can-Am logo on the front.
- Can-Am-branded tape inside and flag label at back.
- Snapback closure at back.

Can-Am Off-Road Livin' Flat Cap

288323 • One size | Black (90), Bronze (92)

Unisex Off-Road Livin' cap with flat peak.
- Content: 100% cotton.
- Mesh: 100% polyester.
- 5-panel construction.
- Embroidered patch at front.
- Inside Can-Am-branded tape.
- Snapback closure at back.

Can-Am Division Pre-Curved Cap

288431 • One size | Army Green (77), Black (90)

Pre-Curved Can-Am Off-Road Division with 3D embroidery offering everyday comfort and a stylish look.
- 100% cotton.
- 6-panel construction.
- 3D embroidery and satin stitch flat embroidery at front.
- Inside Can-Am branded tape.
- Snapback closure at back.

Can-Am Reversible Camo Beanie

288160 • One size | Army Green (77)

Two-in-one reversible beanie with our new hexagon camo knit pattern.
- 95% acrylic, 4% nylon, 1% spandex.
- Hypoallergenic.
- Small folded Can-Am label at front.
- Embroidered Can-Am logo at front.

UNISEX

NEW Can-Am Flag Emblem Beanie

286847 • One size

Army Green (77), Black (90), Grey (09)

Can-Am Flag Emblem Beanie designed with a supersoft fabric for a warm and comfortable silhouette.

- 87% polyester, 10% wool, 3% spandex.
- Rib-knit construction for stretch and comfort.
- Folded cuff for a secure and classic look.
- Can-Am patch at front.
- Soft, cozy hand feel.

1973 Signature Bandana

288281 • One size

Black (90), Wine (32), Denim Blue (79)

Our bandana is a cheerful accessory, perfect for our bold riders!
It will become your new staple piece when riding.

- 100% cotton.
- Dimensions: 24" x 24".
- Can be worn many different ways.
- Checkered print, Can-Am logo and 1973 printed.

NEW Can-Am Riding Tube

288405 • One size

Black (90), Black with Graphics (94)

Lightweight riding tube designed for comfort and versatile protection during outdoor activities.

- 100% polyester jersey.
- Lightweight fabric with UV50 protection.
- All-over print design.
- 12 different configurations: bandana, headband, balaclava and more.
- Protects from sun, wind, or cold.
- Flatlocked seams to avoid skin chafing.
- Woven label featuring Can-Am colors.

PLAY AND LICENSING

TOYS AND COLLECTIBLES

MISC

NEW 1:10 Can-Am Maverick X3 RC Toy

B10828 • One size | Denim Blue (79)

Product dimensions: 341 x 168 x 170 mm.
- 4-direction radio-controlled operation: forward, backward, left and right.
- Working suspension.
- Functional headlights and taillights.
- Authentic exterior design.
- Realistic tire tread design.

NEW 1:12 Maverick X3 X rs Turbo RR Winter Edition

B10794 • One size | Navy (89)

Product Dimensions:
378 x 161 x 153 mm.
- Metal diecast construction.
- Rolling tracks.
- Posable front tracks.
- Functional suspension.
- Opening doors.
- Interior cab details.
- Authentic exterior design.
- Realistic track design.

1:12 Maverick X3 X rs Turbo RR Premium Replica

B10787 • One size | Black (90)

Product dimensions:
286 x 155 x 145 mm.
- Diecast metal and plastic.
- Free-rolling wheels.
- Articulated steering.
- Functional suspensions.
- Openable doors.
- Interior cab details.
- Authentic exterior design.

1:12 X3 X rs Turbo RR Premium Replica with Accessories

B10788 • One size | Red (30)

Product dimensions:
281 x 155 x 161 mm.
- Diecast metal and plastic.
- Free-rolling wheels.
- Articulated steering.
- Functional suspensions.
- Openable doors.
- Interior cab details.
- Authentic exterior design.
- Accessories such as Adventure Roof Rack, LinQ pivoting Rack and tire.

1:12 Maverick X3 X rc Turbo RR Premium Replica

B10789 • One size | Red (30)

Product dimensions:
286 x 155 x 145 mm.
- Diecast metal and plastic.
- Free-rolling wheels.
- Articulated steering.
- Functional suspensions.
- Openable doors.
- Interior cab details.
- Authentic exterior design.

NEW 1:32 Diecast Can-Am Maverick R X rs with Smart-Shox

B10818 • One size | Navy (89)

Product Dimensions: 105.2 x 56.7 x 60.3 mm.
- Diecast metal and plastic.
- Free-rolling wheels.
- Clear windows and interior cab details.
- Authentic exterior design.
- Authentic tire tread design.
- Roof rack and spare tire.

NEW 1:32 Diecast Can-Am Maverick R MAX X rs with Smart-Shox

B10819 • One size | Navy (89)

Product Dimensions: 107 x 57.8 x 54.2 mm.
- Diecast metal and plastic.
- Free-rolling wheels .
- Interior cab details.
- Authentic exterior design.
- Authentic tire tread design.

NEW 1:32 Diecast Can-Am Maverick X3 DS Turbo

B10816 • One size | Denim Blue (79)

Product Dimensions: 107 x 57.8 x 54.2 mm.
- Diecast metal and plastic.
- Free-rolling wheels .
- Interior cab details.
- Authentic exterior design.
- Authentic tire tread design.

NEW 1:32 Diecast Can-Am Maverick X3 MAX X rc Turbo RR

B10817 • One size | Red (30)

Product Dimensions: 107 x 57.8 x 54.2 mm.
- Diecast metal and plastic.
- Free-rolling wheels.
- Interior cab details.
- Authentic exterior design.
- Authentic tire tread design

1:32 Diecast Maverick Sport 24 pcs Case-Pack

B10790 • One size | Mixed color (18)

This Case-Pack includes:
- 12 x 1:32 Maverick Sport X rc (Red).
- 12 x 1:32 Maverick Sport X xc (Silver).

1:32 Diecast Maverick Trail 24 pcs Case-Pack

B10791 • One size | Mixed color (18)

This Case-Pack includes:
- 12 x 1:32 Maverick Trail DPS (Black).
- 12 x 1:32 Maverick Trail DPS (Blue).

1:32 Diecast Commander 24 pcs Case-Pack

B10792 • One size | Mixed color (18)

This Case-Pack Includes:
- 12 x 1:32 Commander XT-P (Orange).
- 12 x 1:32 Commander XT (Black).

1:32 Diecast Defender 24 pcs Case-Pack

B10793 • One size | Mixed color (18)

This Case-Pack includes:
- 12 x 1:32 Defender X mr (Silver).
- 12 x 1:32 Defender XT HD9 (Navy).

1:32 Diecast Maverick Bundle

B10777 • One size | Mixed color (18)

Bundle includes:
- 10 x 1:32 Maverick X3 X RS Turbo RR (Black).
- 5 x 1:32 Maverick X3 X RS Turbo RR (Blue).
- 5 x 1:32 Maverick X3 X RS Turbo RR (Red).
- 2 x 1:32 Maverick X3 X RS Turbo RR Sand (Red).
- 2 x 1:32 Maverick X3 X RS Turbo RR Winter (Red).

1:32 Diecast Outlander Bundle

B10778 • One size | Mixed color (18)

Bundle includes:
- 12 x 1:32 Outlander XT 1000R (Blue).
- 12 x 1:32 Outlander XT 1000R (Yellow).

1:32 Diecast Renegade Bundle

B10779 • One size | Mixed color (18)

Bundle includes:
- 6 x 1:32 Renegade X xc (Sand).
- 6 x 1:32 Renegade X xc (Red).
- 6 x 1:32 Renegade X mr 1000R (Sand).
- 6 x 1:32 Renegade X mr 1000R (Gold).

REPLACEMENT PARTS

MISC

Helmet Service Pad

448695 • One size | Black (90)

- Part made to support a helmet while servicing it.

RAYVIK

MISC

Rayvik X5 Replacement Helmet Liner

929166 • XS, S, M, L, XL, 2XL, 3XL, 4XL | Black (90)

- Replacement liner compatible with Rayvik X5 helmets.
- Sizes are not interchangeable.

Rayvik X5 Cheek Pads

929167 • XS, S, L, 3XL, 4XL | Black (90)

- Replacement cheek pads for Rayvik X5 helmet.
- XS (50 mm).
- S (45 mm).
- L (40 mm) original size of M, L and XL helmet size.
- 3XL (35 mm).
- 4XL (30 mm).

Rayvik Goggles Replacement Nose Guard
(Not illustrated)

940021 • One size | Black (90)

- Fits Rayvik goggles.

Rayvik X5 Replacement Peak

929168 • One size | Black (90), Sand (03)

- Replacement peak compatible with Rayvik X5 helmets.
- Includes peak breakaway post.

Rayvik X5 Replacement Peak Breakaway Post

929169 • One size | Black (90)

- Replacement part compatible with Rayvik X5 helmets.

Rayvik X5 Side Vents
(Not illustrated)

929237 • One size | Black (90)

- Replacement mesh side vents for Rayvik X5.

MISC

Rayvik Goggles Mirrored Off-Road Lens

940022 • One size | Red (30), Yellow (10)

- Optional lens for the Rayvik goggles.
- Cat. 2 Amber base color.
- Full mirror coating.
- Anti-fog treated.
- Ideal for sunny and partly cloudy days.

Rayvik Goggles Clear Off-Road Lens

940017 • One size | Clear (00)

- Fits all Rayvik goggles.
- Injected PC lens.
- Anti-fog.

Rayvik Goggles Mirrored Winter Lens

940020 • One size | Red (30), Sand (03), Yellow (10)

- Optional lens for the Rayvik goggles.
- Cat. 2 Rose base color, full mirror coating, ideal for sunny and partly cloudy days.

Rayvik Goggles Winter Lens

940019 • One size | Clear (00), Pink (36), Yellow (10)

- Compatible with Rayvik goggles.

Rayvik Off-Road Goggles Tear-Offs

940015 • One size | Clear (00)

- Pack of 10.

VIBE

MISC

Vibe Velcro® & Adhesive Kit

929152 • One size | Black (90)

Replacement Velcro® and adhesive for Vibe Application.

- Speaker Velcro® (2x)
- Wired mic Velcro® (1x)
- Boom mic Velcro® (1x)
- Boom mic stabiliser Velcro® (1x)
- Boom mic wind sponge (1x)
- Vibe universal fastener Velcro® (1x) (4 pcs)
- Vibe universal dual sided adhesive (1x) (2 pcs)
- Vibe universal single sided adhesive (1x) (3 pcs)

Vibe Microphone

929132 • One size | Black (90)

- Fits Vibe Communication System by BRP.

Vibe Speakers

929133 • One size | Black (90)

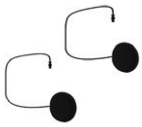

- Fits Vibe Communication System by BRP.

PYRA

MISC

NEW Pyra X1 RPM Peak Pivots *(Not illustrated)*	**929173** • One size	Black (90)
	• Replacement peak pivot set for Pyra X1 helmets.	
NEW Pyra X1 RPM Peak #929212	**929182** • One size	Green (70), Grey (09), Orange (12)
	• Fits Pyra X1 #929212	
NEW Pyra X1 RPM Peak #929153	**929183** • One size	Black (90)
	• Fits Pyra X1 #929153	
NEW Pyra X1 RPM Peak #929211	**929184** • One size	Black (90), Pink (36), Sand (03)
	• Fits Pyra X1 #929211	
Pyra Headliner	**929060** • XS, S, M, L, XL, 2XL, 3XL	Charcoal Grey (07), Black (90)
	• Fits Pyra helmet family.	
Pyra Cheek Pads	**929061** • XS, S, M, L, XL, 2XL, 3XL	Charcoal Grey (07), Black (90)
	• Fits Pyra helmet family.	
Pyra Wind Deflector	**929062** • S (fits XS/S/M/L), L (fits XL/2XL/3XL)	Black (90)
	• Fits Pyra helmet family.	
Pyra Peak Pivots	**929073** • One size	Black (90)
	• Fits Pyra helmet family. • Includes 2 pcs.	

MISC

Pyra Fixed Peak Pivots	**929096** • One size	Black (90)
	• Fits Pyra helmet family. • Includes 2 pcs.	
Pyra Front Vent Grid	**929097** • S (fits XS/S/M/L), L (fits XL/2XL/3XL)	Black (90)
	• Fits Pyra helmet family.	
Can-Am Pyra Phantom Peak	**929163** • S (fits XS/S/M/L), L (fits XL/2XL/3XL)	Black (90), Grey (09)
	• Fits Pyra helmet style 929159.	
Pyra Fade Peak	**929091** • S (fits XS/S/M/L), L (fits XL/2XL/3XL)	Beige (02), Grey (09), Turquoise (Aqua) (76), White (01)
	• Fits Pyra helmet family.	
Can-Am Pyra Peak	**929063** • S (fits XS/S/M/L), L (fits XL/2XL/3XL)	Blue (80), Charcoal Grey (07), Red (30)
	• Fits Pyra helmet family.	
Can-Am Pyra Dune Peak	**929064** • S (fits XS/S/M/L), L (fits XL/2XL/3XL)	Charcoal Grey (07), Grey (09), Red (30), Sand (03)
	• Fits Pyra helmet family.	

EXOME

MISC

NEW Exome M1 Pinlock® Insert *(Not illustrated)*	**929174** • One size	Clear (00)
	• Anti-Fog Pinlock® 70 Insert, Fits Exome M1 helmets	
NEW Exome M5 Helmet Liner	**929177** • XS, S, M, L, XL, 2XL, 3XL	Black (90)
	• Fits Exome M5 Helmet.	
NEW Exome M5 Cheek Pads	**929178** • XS, S, M, L, XL, 2XL, 3XL	Black (90)
	• Fits Exome M5 Helmet.	
NEW Exome M5 Pinlock® Insert *(Not illustrated)*	**929179** • One size	Clear (00)
	• Anti-Fog Pinlock® 70 Insert, Fits Exome M5 helmets.	
NEW Exome F5 Forced Air Snorkel	**929216** • One size	Black (90)
	• Fits Exome F5 helmets, includes the tube and the main part for on-helmet installation, can be used to transform Exome F5 Helmet into a forced air version.	
NEW Exome M5 Shield	**929219** • One size	Clear (00), Smoke (57)
	• Replacment shield for Exome M5 Helmet.	
NEW Exome M1 Shield	**929221** • One size	Clear (00), Smoke (57)
	• Pinlock®-ready visor. • Fits Exome M1 Helmet and 929190 Can-Am Exome Modular Helmet (DOT/ECE).	
NEW Exome M1 Peak	**929222** • One size	Black (90), Matte Black (90)
	• Fits Exome M1 helmets.	

MISC

NEW Exome M5 Peak	**929223** • One size	Black (90)

• Fits Exome M5 helmets.

NEW Exome F5 Helmet liner	**929224** • XS, S, M, L, XL, 2XL, 3XL	Black (90)

• Fits Exome F5 helmets.

NEW Exome F5 Cheek Pads	**929226** • XS, S, M, L, XL, 2XL, 3XL	Black (90)

• Fits Exome F5 helmets.

NEW Exome F5 Shield	**929227** • One size	Clear (00), Smoke (57)

• Replacement Pinlock®-ready face shield for the Exome F5 Helmet.

NEW Exome F5 Pinlock® Insert *(Not illustrated)*	**929228** • One size	Clear (00)

• Anti-Fog Pinlock® 70 Insert, fits Exome F5 helmets family.

NEW Exome F5 Forced Air Neck Curtain	**929229** • One size	Black (90)

• Fits Exome F5 Helmet, large neck curtain for the forced air version.

NEW Exome F5 Top Air Vent	**929232** • One size	Black (90)

• Fits Exome F5 helmets, originally on non-forced air version. May be used to transform Exome F5 Forced Air Helmet into a non-forced air helmet.

Exome Headliner DOT ECE22.06	**929188** • XS, S, M, L, XL, 2XL, 3XL	Black (90)

• Fits Can-Am Exome Modular Helmet (DOT/ECE) (929190) and Can-Am Exome Open-Face Helmet (DOT/ECE) (929185).

MISC

Exome Single Lens Shield

929044 • One size | Clear (00)

- Fits Can-Am Exome Helmet (929040).
- Replacement Pinlock®-ready face shield for Exome helmets.

Exome Summer Chin Curtain

929046 • One size | Black (90)

- Fits Can-Am Exome Helmet (929040).

Exome Peak Fasteners Kit

929047 • One size | Black (90)

- Fits Exome helmet family.

Exome Summer Headliner

929049 • XS, S, M, L, XL, 2XL, 3XL | Charcoal Grey (07)

- Fits summer Exome helmet family.

Exome Peak

929057 • One size | Black (90), Matte Black (93)

- Fits Exome helmet family.

Exome Summer Vents Kit

929065 • One size | Black (90)

- Fits Exome helmet family.

Exome Shield Mechanism

929067 • One size | Black (90)

- Fits Exome helmet family.

MISC

Exome Shield Sealing Gasket

929070 • One size | Black (90)

- Fits Exome helmet family.

Exome Summer Sun Shield

DOT ECE22.06

929072 • One size | Smoke (57), Clear (00)

- Fits Exome helmet family.

Exome Summer Chin Lock Covers

929075 • One size | Black (90)

- Fits Exome helmet family.

Exome Summer Cheek Pads

929092 • XS, S, M, L, XL, 2XL, 3XL | Charcoal Grey (07)

- Fits summer Exome helmet family.

Exome Open-Face Peak

929145 • One size | Black (90)

- Fits Exome open-face helmet family.

Exome Open-Face Headliner

DOT

929147 • XS, S, M, L, XL, 2XL, 3XL | Charcoal Grey (07)

- Fits Exome open-face helmet family.
- DOT certified version only.

Exome Open-Face Cheek Pads

929148 • XS, S, M, L, XL, 2XL, 3XL | Black (90), Charcoal Grey (07)

- Fits summer Exome open-face helmet family.

RETRO OPEN-FACE

MISC

Retro Open-Face RPM Peak

929192 • One size | Black (90)

- Fits Retro open-face helmets.

Retro Open-Face Cheek Pads

929193 • S, M, L, XL, 2XL | Black (90)

- Fits Retro open-face helmets.

FLINT

MISC

Flint Goggles Tear-Offs

448759 • One size | Clear (00)

- Ready-to-use clear tear-off tabs.
- Pack of 10.

Flint Goggles Nose Guard

448760 • One size | Black (90)

- Fits all Flint goggles:
  - Flint Dune
  - Flint Fade
  - Flint Phantom

Flint Goggles Clear Single UV Lens

448764 • One size | Clear (00)

- Fits all Flint goggles:
  - Flint Dune
  - Flint Fade
  - Flint Phantom

Flint Goggles Chrome Single UV Lens

448765 • One size | Blue (80), Chrome (99), Red (30), Turquoise (Aqua) (76), Yellow (10)

- Fits all Flint goggles:
  - Flint Dune
  - Flint Fade
  - Flint Phantom

Flint Photochromatic RPM Single UV Lens

448784 • One size | Smoke (57)

- Fits Flint goggle family.

TRENCH

MISC

Trench Goggles Nose Guard

448708 • One size | Black (90)

- Fits Trench goggles.

Trench Goggles Single UV Lens

448697 • One size | Clear (00)

- Trench anti-scratch, anti-fog RPM lens.
- Clear.

Trench OTG Goggles Single UV Lens

448793 • One size | Clear (00), Smoke 60% (21)

- Fits Trench OTG goggle family.
- Can-Am laser etching on lens.

Trench Goggles Tear-Offs

448727 • One size | Clear (00)

- Compatible with the Can-Am Trench goggles.
- Pack of 10.

Trench OTG Goggles Tear-Offs

448795 • One size | Clear (00)

- Fits Trench OTG goggle family.
- Pack of 10.

BRP REIMAGINES THE WAY YOU ACCESS YOUR WORLD
Can-Am is one of many success stories from BRP, the global company behind some of the most daringly innovative products and experiences that move you.
BECAUSE IT'S NOT ABOUT THE DESTINATION, IT'S ABOUT THE JOURNEY—YOURS.
PYRA
BRP
ski-doo
LYNX
SEA-DOO
can-am
ROTAX

CANAMOFFROAD.COM